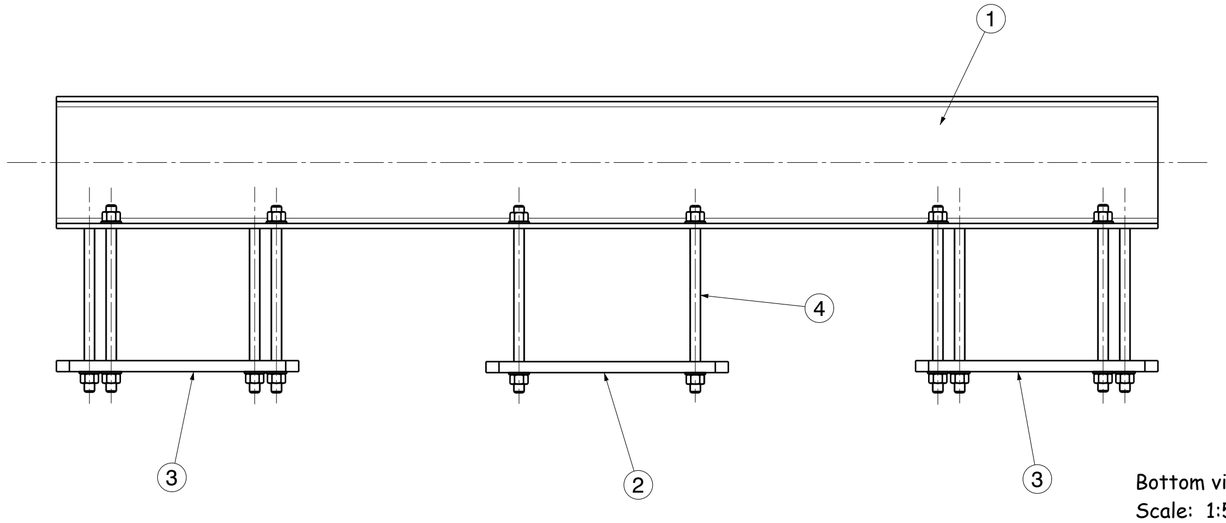

Bottom view
Scale: 1:5

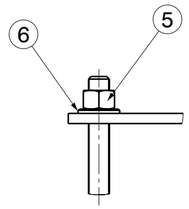

Detail B
Scale: 2:5

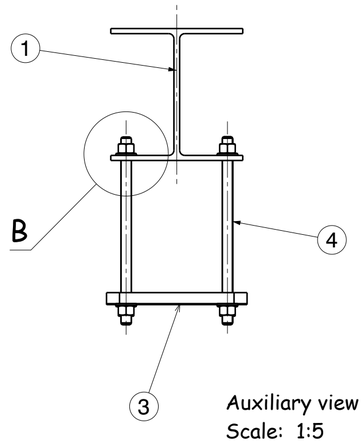

Auxiliary view A
Scale: 1:5

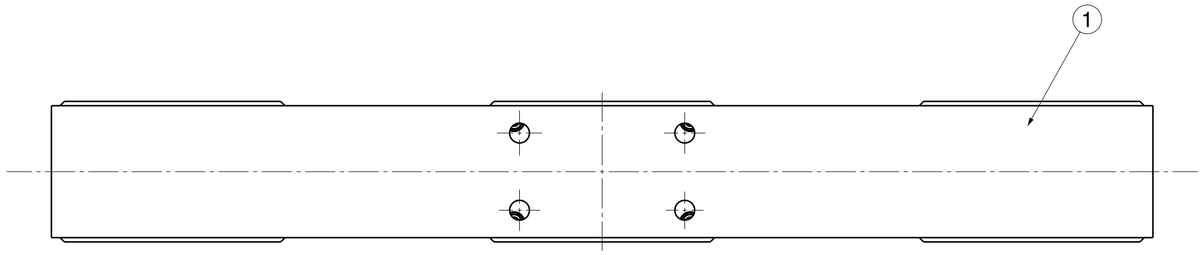

Front view
Scale: 1:5

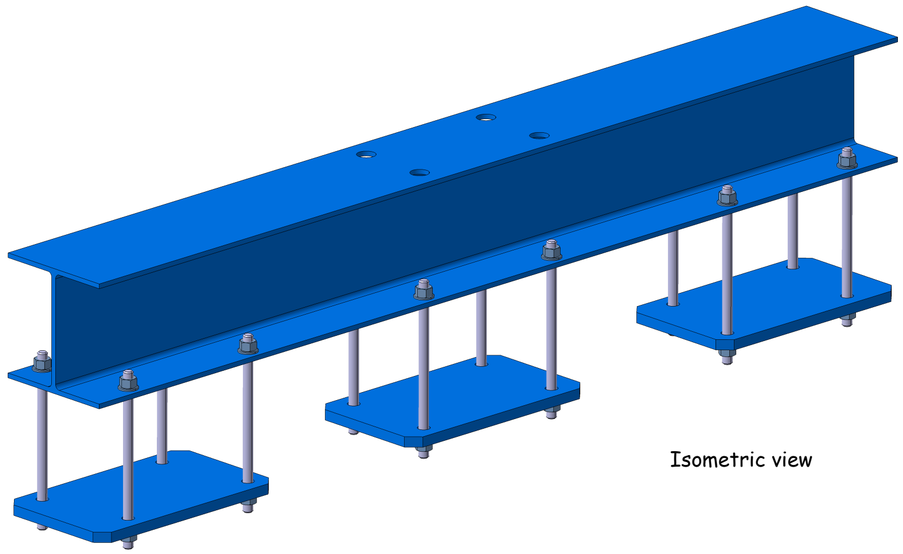

Isometric view

PART.N	DRAWING	MATERIAL	DENOMINATION	WEIGHT	Q.TY
6	/	HS STEEL 10.9	Washer 1/2	/	24
5	/	HS STEEL 10.9	BOLT 1/2	/	24
4	/	HS STEEL 10.9	Threated Rod 1/2 x 8 1/2	/	12
3	/	ASTM A36	Lateral Counterplate	4.5Kg	2
2	/	ASTM A36	Central Counterplate	4.5Kg	1
1	/	ASTM-A6 W6x15	Beam	32Kg	1

General tolerance ISO 2768-mK-E | Geometrical tolerance ISO 8015-E | Roughness ISO 1302

NATIONAL INSTITUTE FOR NUCLEAR PHISYCS
FRASCATI NATIONAL LAB
S.P.A.S

SIZE A2

PROJECTION

REVISION	DATE	NAME
.	DATE : .	NAME : .
.	DATE : .	NAME : .
.	DATE : .	NAME : .

TOTAL WEIGHT (Kg)	DATE	DRAWN
/	30/07/2017	D.Orecchini
SCALE	DATE	CHECKED
1:5/2:5	16/08/2017	D.Orecchini
SHEET	DATE	APPROVED
2/8	.	.

/

CLAS12-RICH

Trolley for RICH Transport "Forward Interface Structure"
Assembly