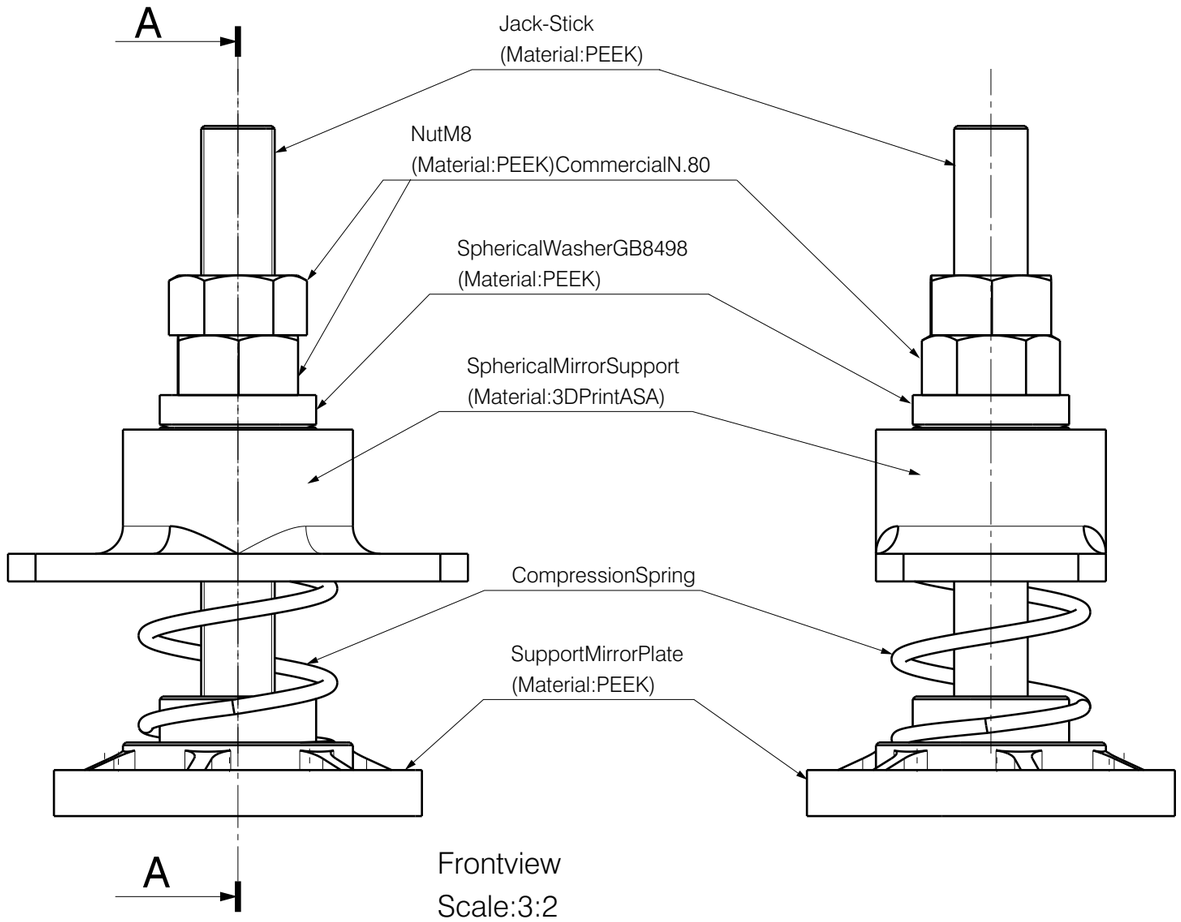

Frontview
Scale:3:2

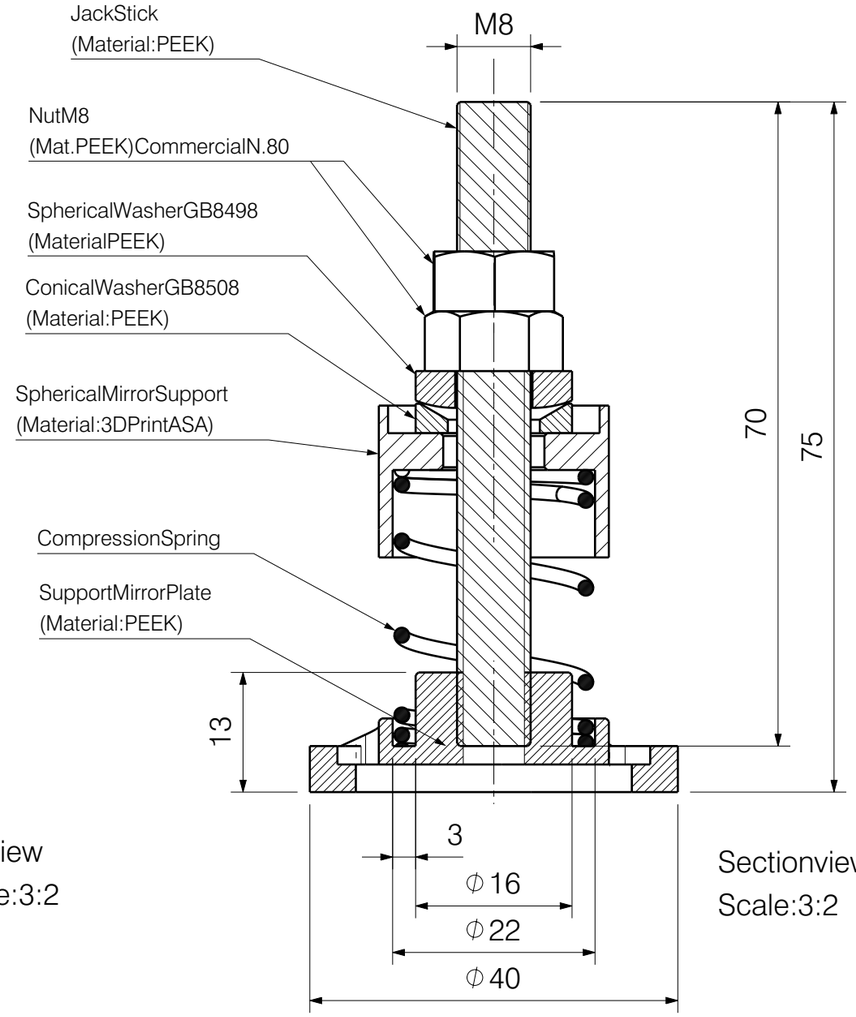

Leftview
Scale:3:2

SectionviewA-A
Scale:3:2

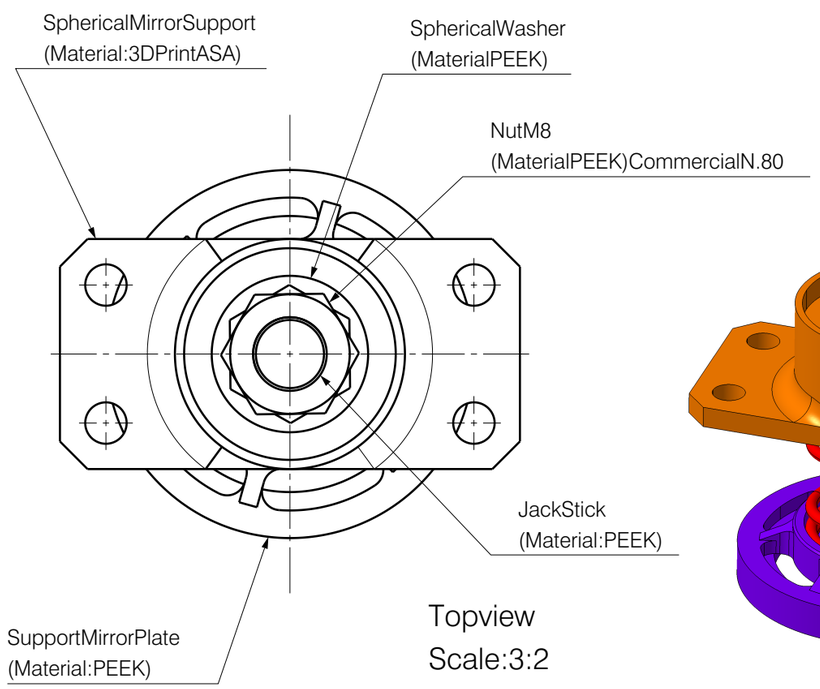

Topview
Scale:3:2

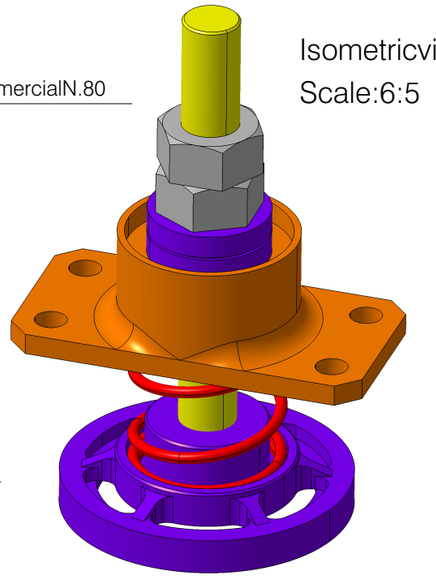

Isometricview
Scale:6:5

				1
MATERIAL	HEAT TREATMENT	SURFACE TREATMENT	WEIGHT	Q.TY

General tolerance ISO 2768-mK-E | Geometrical tolerance ISO 8015-E | Roughness ISO 1302

NATIONAL INSTITUTE FOR NUCLEAR PHISYCS
FRASCATI NATIONAL LAB
S.P.A.S

SIZE A3

PROJECTION

REVISION			
.	DATE : .	NAME : .	
.	DATE : .	NAME : .	
.	DATE : .	NAME : .	

TOTAL WEIGHT (Kg)	DATE	DRAWN
0.00	24/02/2021	D.Orecchini
SCALE 3:2	DATE .	CHECKED .
SHEET 1/1	DATE .	APPROVED .

CLAS 12-RICH
Spherical Mirror
Adjusting and Support System

Spherical Mirror Adjusting Support_Assembly