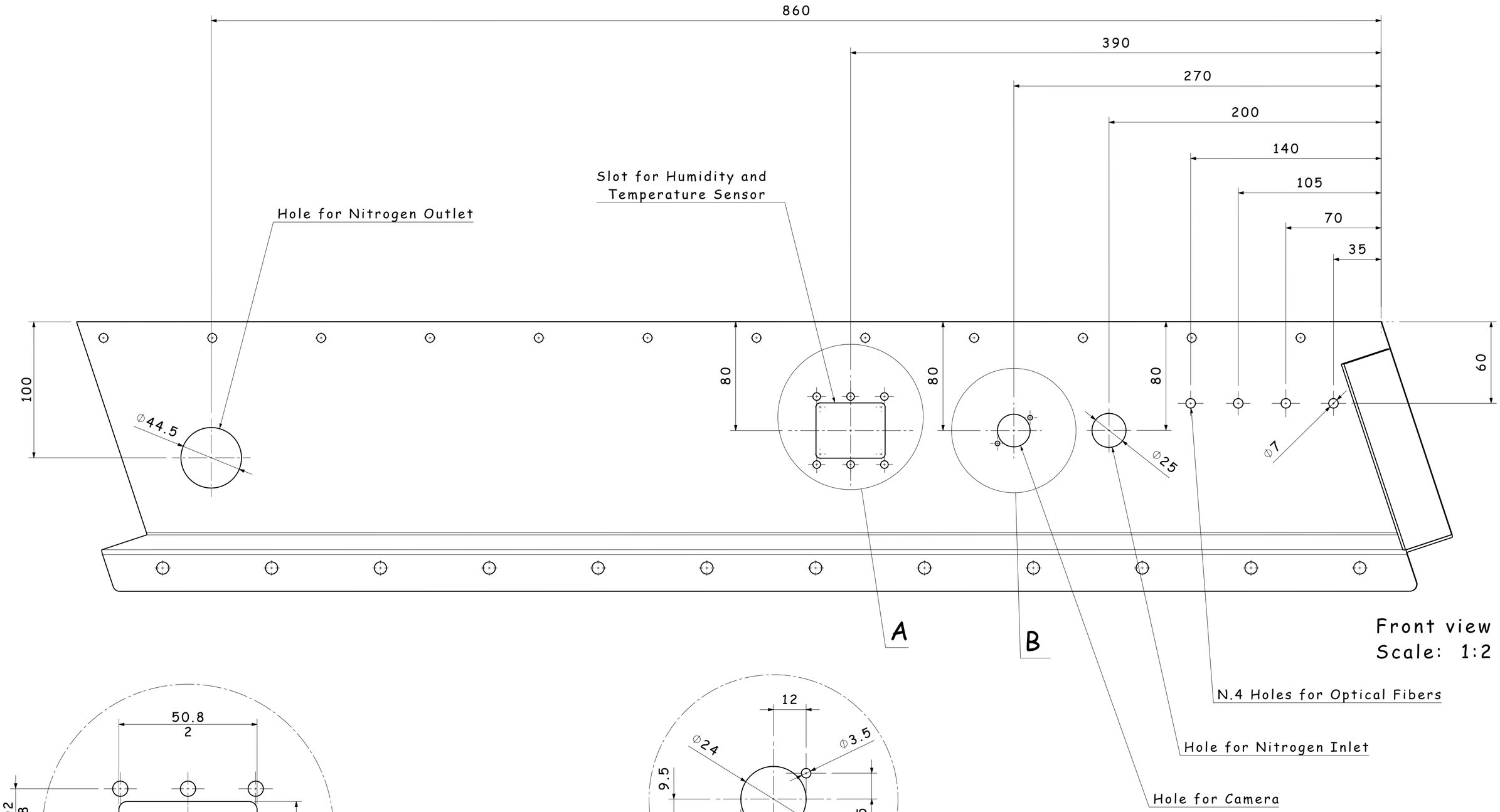

Front view
Scale: 1:2

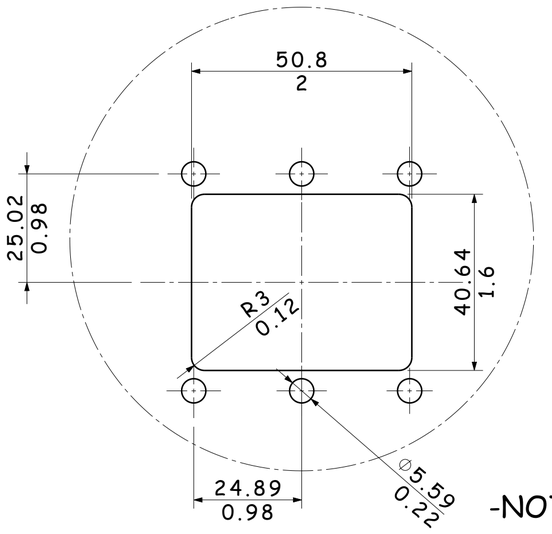

Detail A
Scale: 1:1

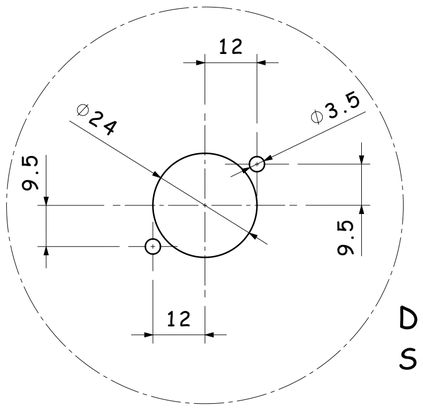

Detail B
Scale: 1:1

-NOTE: The quotes of "Detail B" are espressed in a dual mode, (below inch)

NOTE:
all dimensions are expressed in mm except where expressly indicated.

JLab - 03/25/2022 - Dario Orecchini
RICH-CLAS12
Upper Cables Duct Services _Left Side