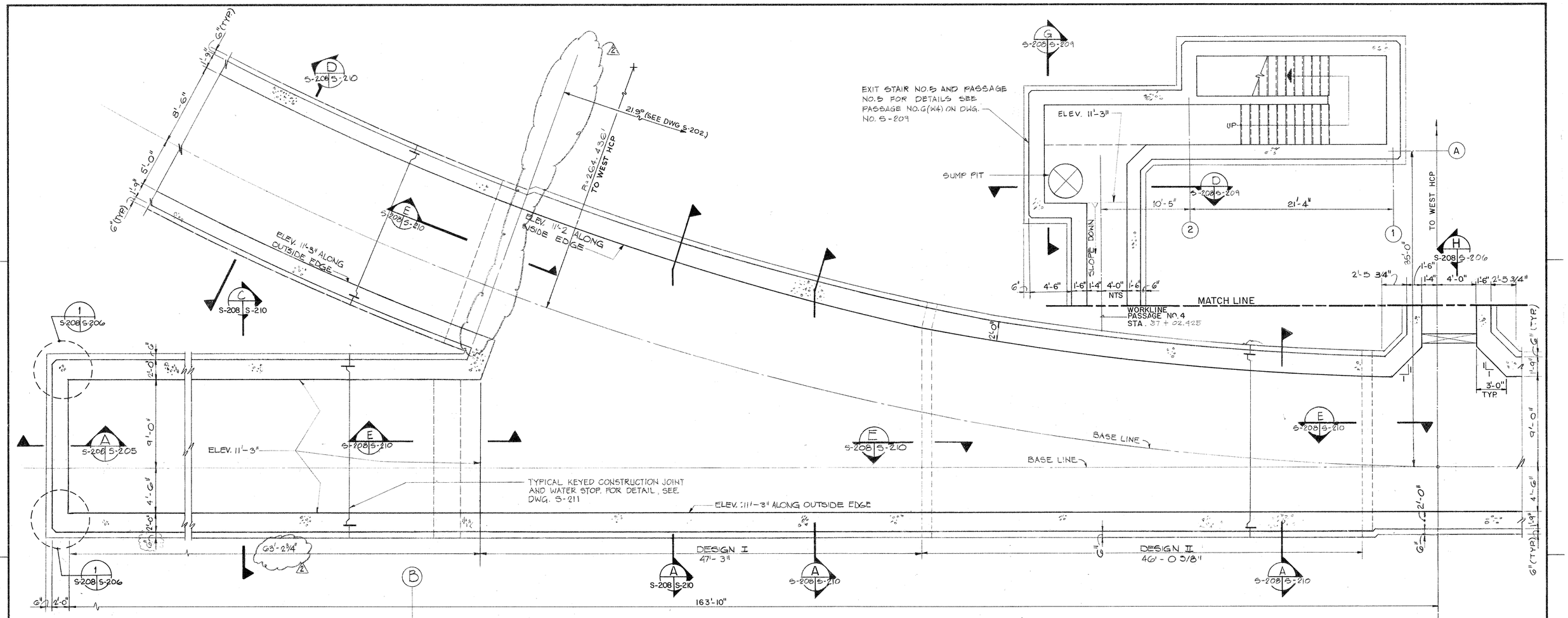

PLAN AT EL.11'-3"
SCALE: 1/4" = 1'-0"

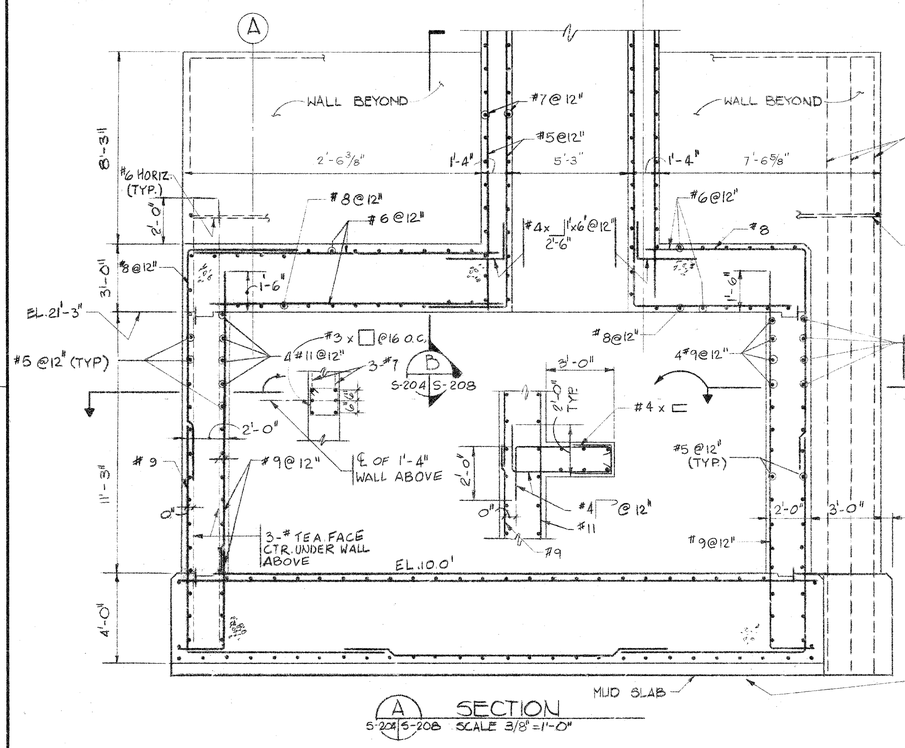

A SECTION
S-204 S-208 SCALE 3/8" = 1'-0"

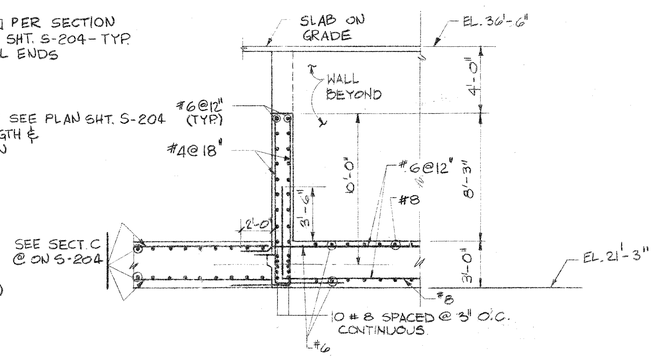

B SECTION
S-204 S-208 SCALE: 1/4" = 1'-0"

NOTES:

1. FOR DETAILS OF REINF. NOT SHOWN OR CALLED OUT, REF.: IDENTICAL LOCATIONS ALONG NORTHEAST JUNCTION CHAMBER ON DRAWING NO. S-206.
2. FOR ADDITIONAL REINF. NOT SHOWN OR CALLED OUT SEE DRAWING S - 205.
3. DELETE CONSTRUCTION AND WATERPROOFING OF END WALL AT THE END OF SOUTHWEST JUNCTION. PROVIDE WATER STOP ALL AROUND AT THE END OF TUNNEL AND EXTEND ALL LONGITUDINAL BARS BY 2' BEYOND THE FACE OF THE TUNNEL.
4. CONSTRUCT NEW BLOCK MASONRY WALL AT 10' FROM THE END TO COMPLETELY CLOSE THE TUNNEL AND WATERPROOF THE WALLS AND ITS JOINTS WITH THE TUNNEL WALLS, FLOOR AND CEILING. PROVIDE ADEQUATE BRACING ON THE INSIDE TO SUPPORT WALL AGAINST WATER PRESSURE.
5. DELETE THE REQUIREMENT TO BACKFILL BEYOND THE END OF THE TUNNEL. EXCAVATION ON SIDES AND TOWARDS TUNNEL WILL BE BACKFILLED IN A STABLE SLOPE (NEARLY EQUAL TO THE ANGLE OF REPOSE OF SOIL) STARTING AT THE END OF THE TUNNEL.

REV	DESCRIPTION	DMJM	CEBAF	
REV 3	AS-BUILT		DLM	11/15/01
REV.2	DIMENSIONAL VERIFICATION		DLM	9-27-88
REV 1	AMENDMENT #1		DLM	6-7-88
REV 0	ISSUED FOR BID		DLM	4-18-88

SURA Southeastern Universities Research Association, Inc.
12070 Jefferson Avenue
Newport News, Virginia 23606

CONTINUOUS ELECTRON BEAM ACCELERATOR FACILITY
NEWPORT NEWS VIRGINIA

DANIEL, MANN, JOHNSON & MENDENHALL
1709 NEW YORK AVENUE N.W.
WASHINGTON D.C. 20006

SUBMITTED-DMJM	RECOMM - CEBAF	APPROVED - SURA

FACILITY
ACCELERATOR FACILITY

DRAWING
SOUTHWEST JUNCTION CHAMBER PLAN AT BEAM LEVEL

SCALE 1/4" = 1'-0"

DWG. NO. 88-S-8-0371-101

S-208

1 0 1 2 3 4 5 6 7
3/8" = 1'-0" GRAPHIC SCALE
2 0 5 10
1/4" = 1'-0" GRAPHIC SCALE