REVISION HISTORY			
ZONE	REV	DESCRIPTION	DATE/REVISER

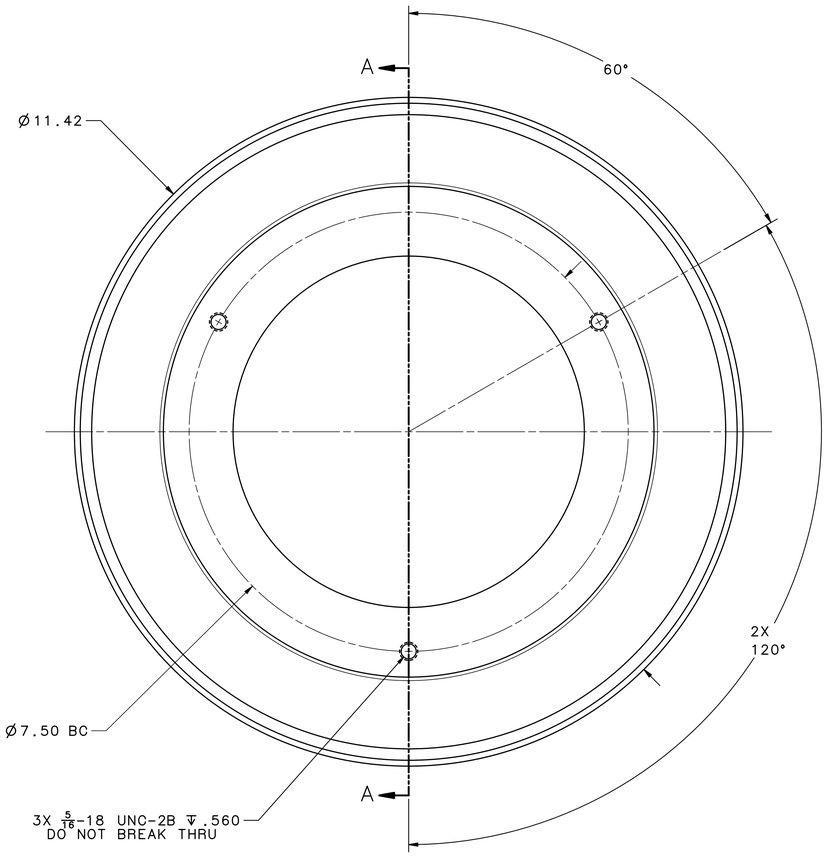

FRONT VIEW

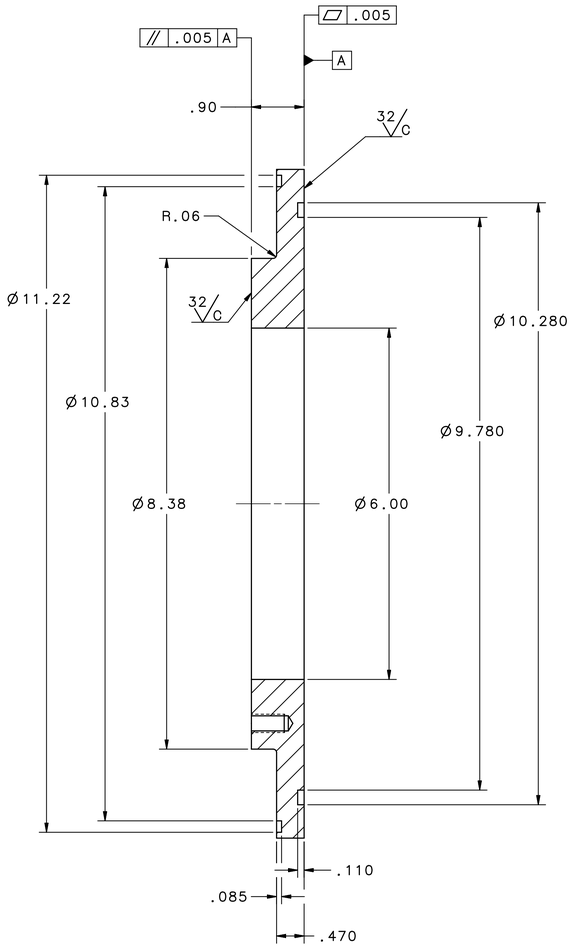

SECTION A-A

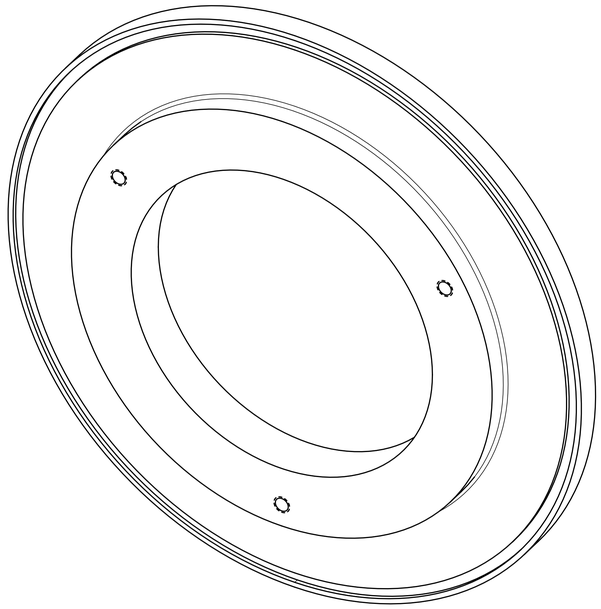

ISOMETRIC VIEW

NOTES:

1. CLEAN AND HANDLE STAINLESS STEEL PER JLAB SPECIFICATION 11141-S-0034.

QTY REQD	ITEM NO.	PART OR IDENTIFYING NO.	NOMENCLATURE OR DESCRIPTION	MATERIAL SPECIFICATION	NOTES

PARTS LIST

EACH SHEET OF MULTI-SHEET DRAWINGS SHALL ALWAYS HAVE THE SAME REVISION LEVEL.

DIM & TOL PER ASME Y14.5 2009.
UNLESS OTHERWISE SPECIFIED
DIMENSIONS ARE IN INCHES.
TOLERANCES ARE:
FRACTIONS ± 1/8 — DECIMAL .X ±.1, .XX ±.01, .XXX ±.005 — ANGLES ± .50°

THIRD ANGLE PROJECTION

MATERIAL: 304 STAINLESS STEEL

FINISH MACHINED SURFACES 125 — UNLESS OTHERWISE NOTED
DEBURR & BREAK ALL SHARP EDGES

DO NOT SCALE DRAWING

DRAWN C.HAYS — DATE 19AUG19

United States Department of Energy
Jefferson Lab — Thomas Jefferson National Accelerator Facility — Newport News Virginia

CRM
SPALLATION NEUTRON SOURCE
VACUUM VESSEL
RELIEF PLATE, FLANGE

SIZE E — DWG. NO. 104210800-M8U-8200-A026 — REV. —

SCALE 1:1 — USED ON ASSY NO. 104210000-M0U-0200-A025 — SHEET 1 OF 1

Approved: 8/27/2019; E-Sign ID : 397192; signed by: AP. 2: M. Wiseman; Ap. 1: M. Marchlik; C.: J. Henry; D: A. Barron