REVISION HISTORY			
ZONE	REV	DESCRIPTION	DATE/REVISER
	A	REV'D ITEM 17 AND REMOVED HARDWARE AS APPROPRIATE	19SEP19/JA

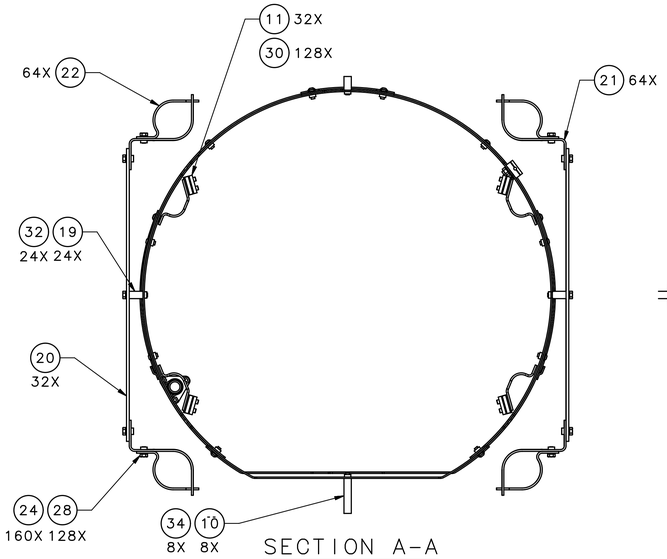

SECTION A-A

VERTICAL BRACKETS SHOWN ONLY

SCALE 1:4

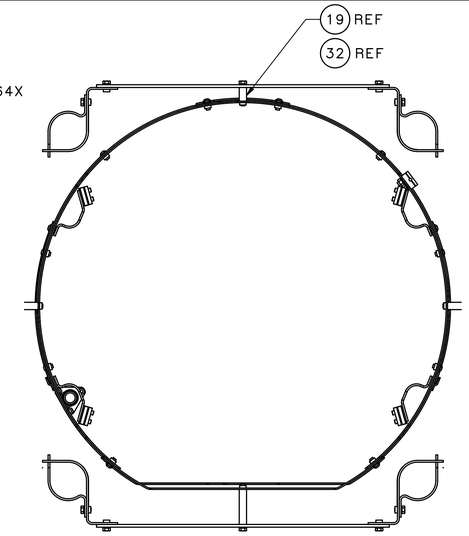

SECTION A-A

HORIZONTAL BRACKETS SHOWN ONLY

SCALE 1:4

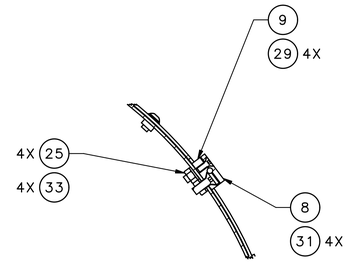

SECTION B-B

SCALE 1:2

4 PLACES
SOME ITEMS REMOVED
FOR CLARITY

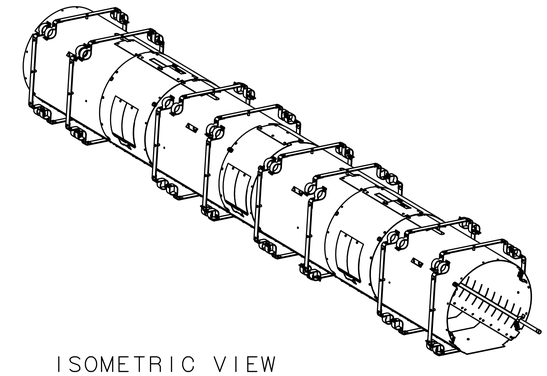

ISOMETRIC VIEW

SCALE 1:16

NOTES:

1. FABRICATE PER STATEMENT OF WORK 104211100-M8U-8200-A002-SOW
2. CLEAN AND HANDLE PER JLAB SPEC 11141-S-0035.
3. ESTIMATED WEIGHT: 720 POUNDS

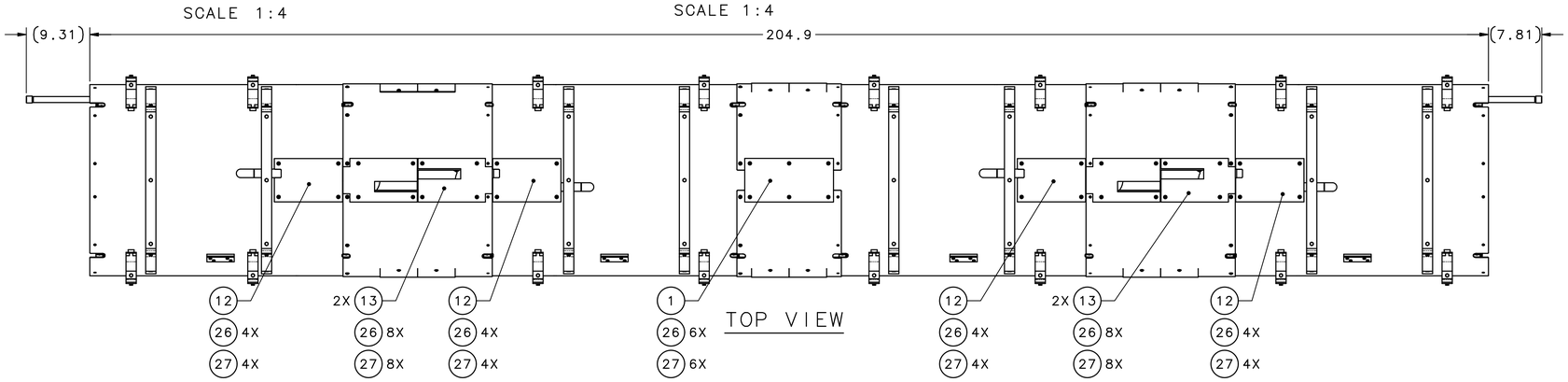

TOP VIEW

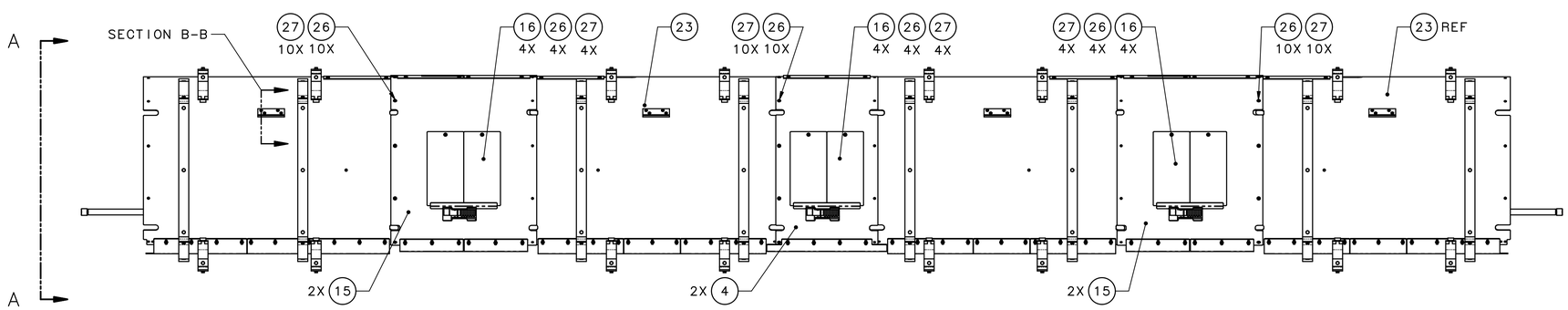

ELEVATION VIEW

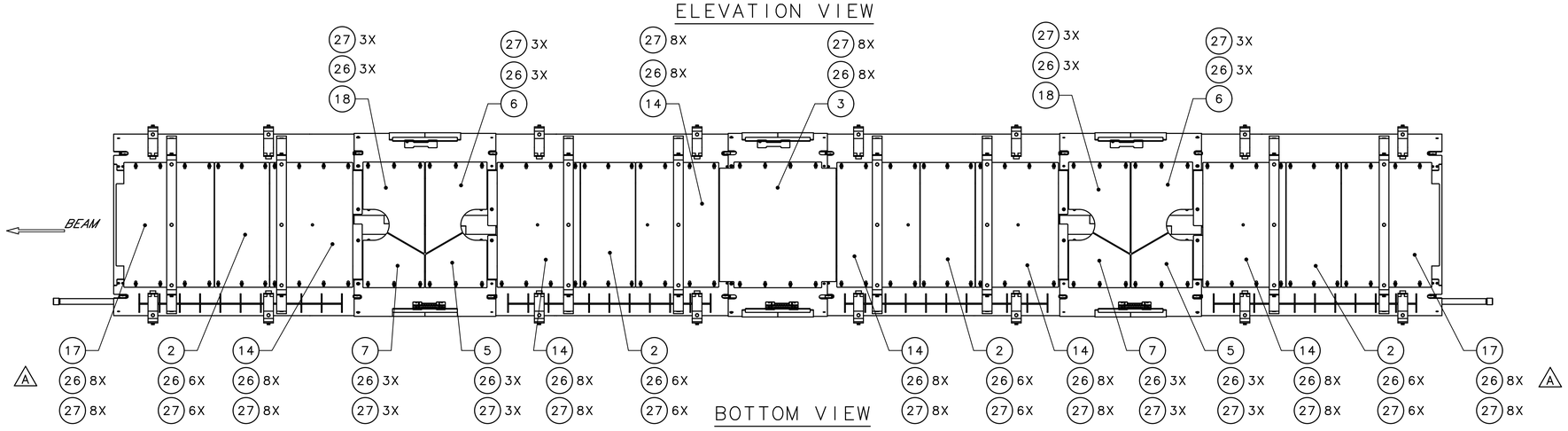

BOTTOM VIEW

QTY REQD	ITEM NO.	PART OR IDENTIFYING NO.	NOMENCLATURE OR DESCRIPTION	MATERIAL SPECIFICATION	NOTES
8	34	-	HEX HEAD SCREW .25-20 UNC-2A X 3.00 LG	304 STAINLESS STEEL	
16	33	-	.25 WASHER PLAIN NARROW	304 STAINLESS STEEL	
24	32	-	HEX HEAD SCREW .25-20 UNC-2A X 1.50 LG	304 STAINLESS STEEL	
16	31	-	FLAT HD HEX SOCKET #10-32 UNC-2A X .50 LG	304 STAINLESS STEEL	
128	30	-	SHCS, #8-32 UNC-2A X .50 LG	304 STAINLESS STEEL	
16	29	-	FLAT HD HEX SOCKET .25-20 UNC-2A X .75 LG	304 STAINLESS STEEL	
128	28	-	HEX HEAD SCREW .25-20 UNC-2A X .50 LG	304 STAINLESS STEEL	
200	27	-	BELLEVILLE SPRING WASHER (.25)	304 STAINLESS STEEL	
200	26	-	BUTTON HEAD SOCKET SCREW .25-20 UNC-2A X .50 LG	304 STAINLESS STEEL	
16	25	-	HEX NUT, .25-20 UNC-2B	SILICON BRONZE	
160	24	-	.250 REGULAR SPRING LOCK WASHER	304 STAINLESS STEEL	
1	23	104211100-M8U-8200-A003	50K SHIELD SUBASSY		
64	22	CRM9005010-1008	MALE CLAMP-SUPPORT		
64	21	CRM9005010-1010	FEMALE CLAMP SUPPORT -SUBASSY		
32	20	CRM9005010-1011	G11-SHIELD SUPPORT		
24	19	CRM9005010-1012	G11 SPACER		
2	18	CRM9005010-1014	COUPLER SMALL TRAY		
2	17	104211100-M8U-8200-A045	HELIUM VESSEL TRAY		
12	16	CRM9005010-1017	ACCESS PANEL		
4	15	CRM9005010-1019	DOUBLE COUPLER BRIDGE -SUBASSY		
6	14	CRM9005010-1020	50K SHIELD BOTTOM ASSEMBLY		
4	13	104211100-M8U-8200-A012	MEDIUM AXIAL ROD COVER		
4	12	104211100-M8U-8200-A011	SMALL AXIAL ROD COVER		
32	11	CRM9005010-1030	NITRONIC CLAMP BLOCK-THRU		
8	10	CRM9005010-1039	G11 SPACER (BOTTOM STRAP)		
4	9	104211100-M8U-8200-A008	BASE-HEAT STATION		
4	8	104211100-M8U-8200-A009	COVER-HEAT STATION		
2	7	CRM9005010-1062	COUPLER SMALL TRAY-1 B		
2	6	CRM9005010-1063	COUPLER SMALL TRAY-2 A		
2	5	CRM9005010-1064	COUPLER SMALL TRAY-2 B		
2	4	CRM9005010-3002	SINGLE COUPLER BRIDGE-SUBASSY		
1	3	CRM9005010-3003	COUPLER LARGE TRAY		
4	2	CRM9005010-3004	HELIUM VESSEL MIDDLE TRAY		
1	1	CRM9005010-3005	CENTER AXIAL ROD COVER-.81 BETA		

PARTS LIST

EACH SHEET OF MULTI-SHEET DRAWINGS SHALL ALWAYS HAVE THE SAME REVISION LEVEL.

DIM & TOL PER ASME Y14.5 2009. UNLESS OTHERWISE SPECIFIED DIMENSIONS ARE IN INCHES. TOLERANCES ARE:
FRACTIONS ± 1/8 — DECIMAL .X ±.1, .XX ±.01, .XXX ±.005 — ANGLES ±.50°

THIRD ANGLE PROJECTION

MATERIAL: SEE PARTS LIST

FINISH: MACHINED SURFACES 125 UNLESS OTHERWISE NOTED; DEBURR & BREAK ALL SHARP EDGES

DO NOT SCALE DRAWING

DRAWN: J. ARMSTRONG — DATE: 11APR19

United States Department of Energy — Jefferson Lab, Thomas Jefferson National Accelerator Facility — Newport News Virginia

CRM
SPALLATION NEUTRON SOURCE - PPU
THERMAL SHIELD
THERMAL SHIELD ASSEMBLY

SIZE E — DWG. NO. 104211100-M8U-8200-A002 — REV. A

SCALE 1:8 — USED ON ASSY NO. 104211100-M8U-8200-A001 — SHEET 1 OF 1

Approved: 9/20/2019; E-Sign ID : 399921; signed by: Ap. 1: M. Wiseman; C.: M. Marchlik; D: A. Barron