REVISION HISTORY			
ZONE	REV	DESCRIPTION	DATE/REVISER

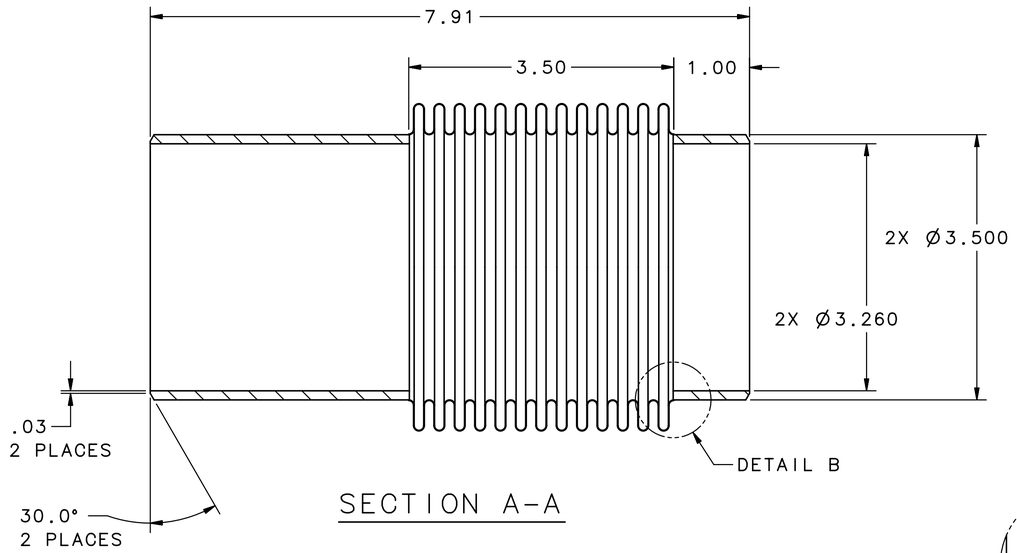

SECTION A-A

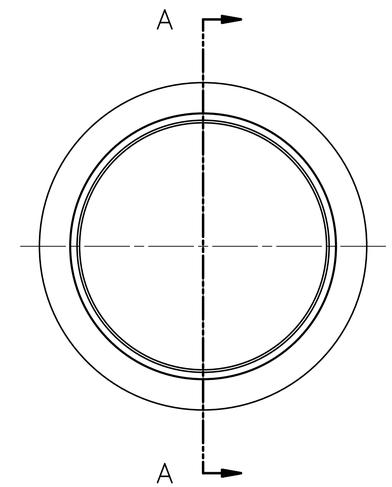

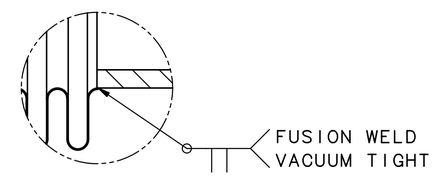

DETAIL B
SCALE 2:1
(2 PLACES)

NOTES:
1. DESIGN AND BUILD IN ACCORDANCE WITH ASME B31.3.
   FLUID SERVICE: NORMAL.
   VENDOR SHALL SUBMIT DESIGN REPORT, MATERIAL CERTIFICATIONS,
   INSPECTION AND TEST REPORTS.

2. BELLOWS ASSEMBLY MUST BE CLEANED AND LEAK TESTED IN ACCORDANCE WITH
   THE FOLLOWING JLAB SPECIFICATIONS:

CLEANING & HANDLING OF STAINLESS STEEL COMPONENTS------#11141S0034
HELIUM LEAK TEST ----------#11141S0029

BELLOWS INFORMATION:

I.D.---------- 3.50 (3.26 MIN)
O.D.---------- 4.32 MAX
AREA----------
WALL THK----------
OPERATING PRESSURE---- 4 ATM DIFFERENTIAL
SQUIRM PRESSURE-------
SPRING RATE----------
AXIAL TRAVEL---------- +.35, -.88
LATERAL TRAVEL-------- ±.30
OPERATING TEMP-------- 2K TO 300K
LIFE---------- 10,000 CYCLES

3. BAG AND TAG WITH DRAWING NUMBER 104211500-A026---

FOR JLAB INTERNAL USE ONLY

SEE ES&H MANUAL CHAPTER 6151 FOR PRESSURE AND VACUUM SYSTEMS SAFETY SUPPLEMENT AND WELDING AND BRAZING SUPPLEMENT

WELD CLASS

CODE

PRESSURE/VACUUM CLASS
ASME B31.3

PRESSURE SYSTEMS NUMBER
PS-CRM-18-001

DIM & TOL PER ASME Y14.5 2009. UNLESS OTHERWISE SPECIFIED DIMENSIONS ARE IN INCHES. TOLERANCES ARE:
FRACTIONS ±1/8 DECIMAL .X ±.1 .XX ±.01 .XXX ±.005 ANGLES ±.50°

THIRD ANGLE PROJECTION

MATERIAL
BELLOWS: 321 CRES
WELD CUFFS: 316L CRES

FINISH MACHINE SURFACES 125 UNLESS OTHERWISE NOTED
DEBURR & BREAK ALL SHARP EDGES

DO NOT SCALE DRAWING

DRAWN J. HOERGER
DATE 15AUG19

United States Department of Energy
Jefferson Lab Thomas Jefferson National Accelerator Facility
Newport News Virginia

CRM
SPALLATION NEUTRON SOURCE - PPU
CAVITY STRING
CON BELLOWS 3.50 ID X 7.91 LG W/WELD PREP

SIZE D DWG. NO. 104211500-M8U-8200-A026 REV. –
SCALE 1:1 USED ON ASSY NO.104211500-M8U-8200-A002/-A017 SHEET 1 OF 1

Approved: 10/29/2019; E-Sign ID : 403846; signed by: Ap. 1: J. Henry; Ap. 2: M. Wiseman; C.: G. Cheng; D: A. Barron