REVISION HISTORY		
REV	DESCRIPTION	DATE/REVISER
A	ADDED: 1.0 X 30 DEGREE CHAMFER	09JUN2020 / JH

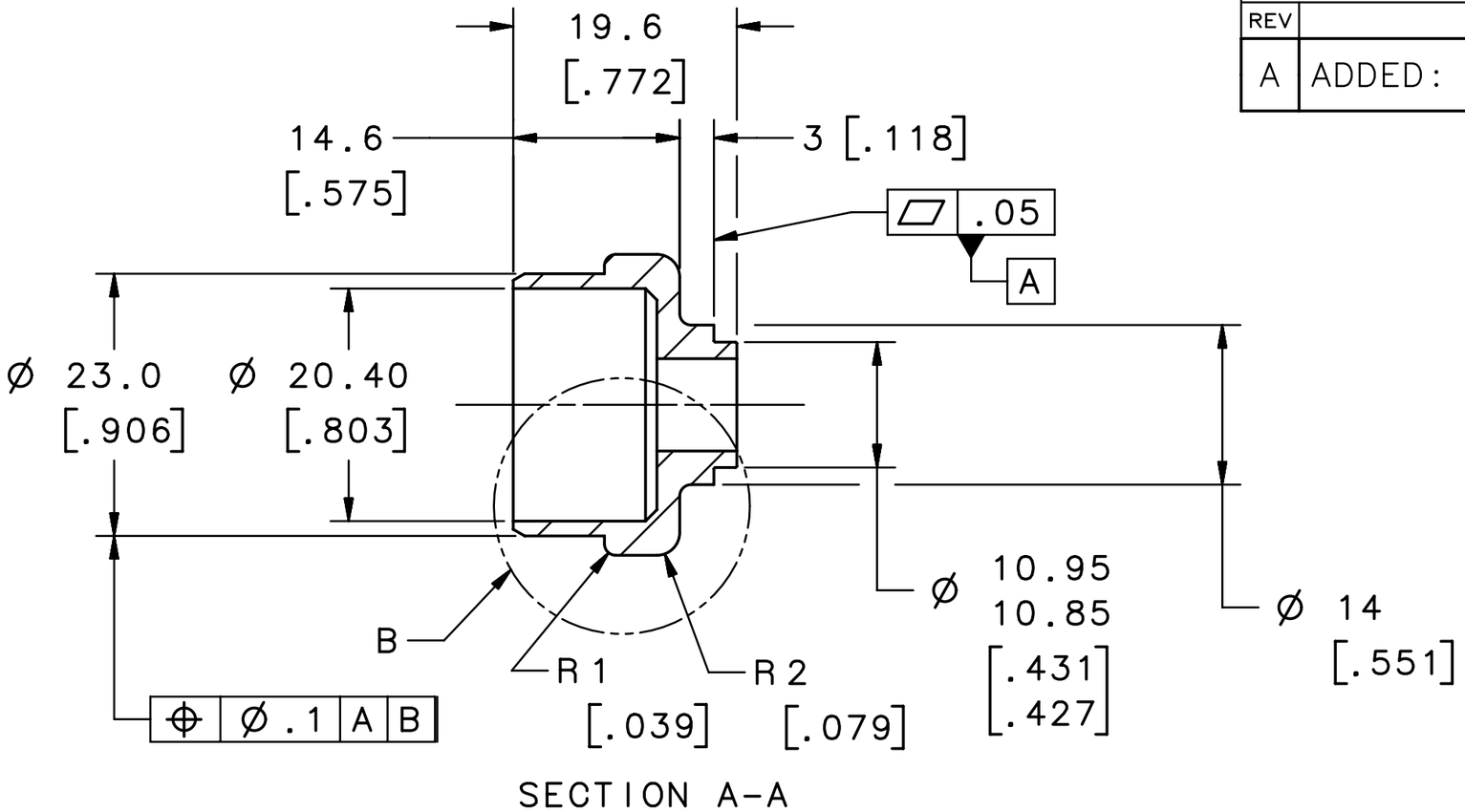

SECTION A-A

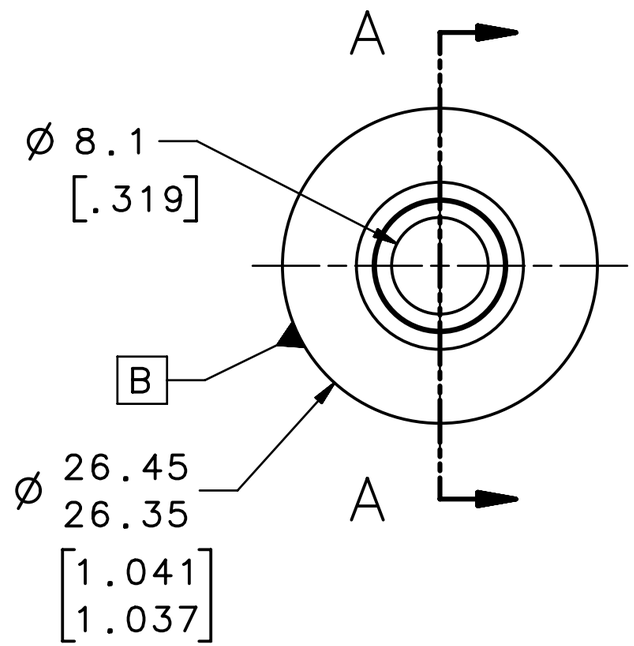

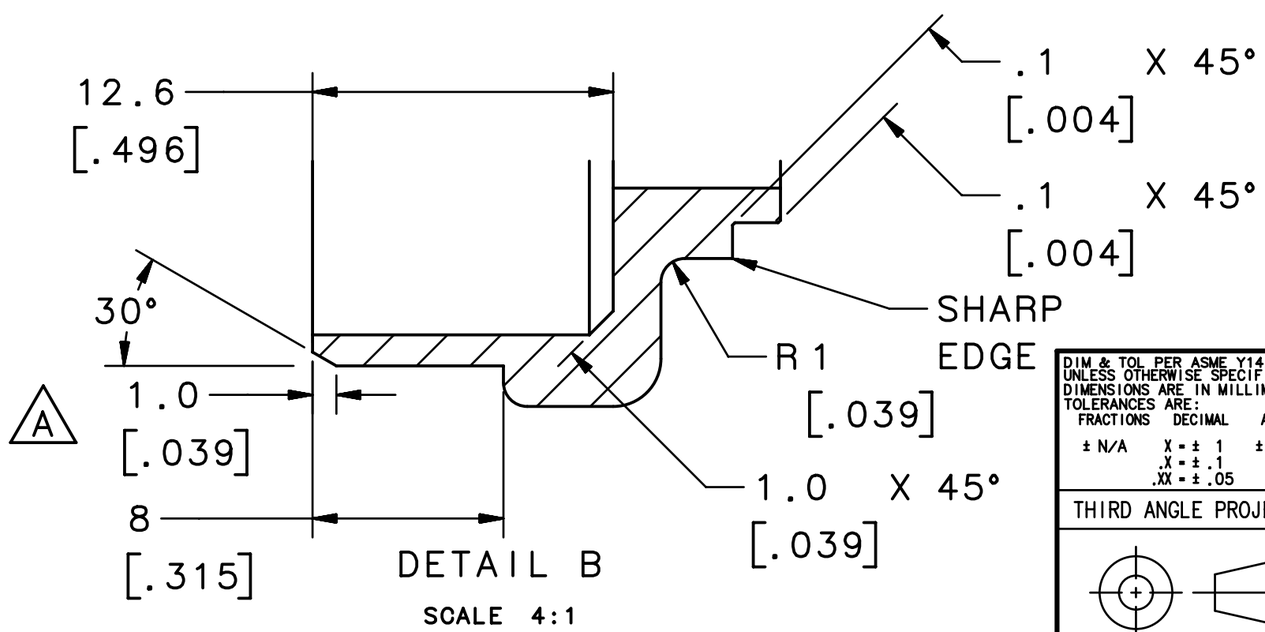

DETAIL B

SCALE 4:1

DIM & TOL PER ASME Y14.5 2009.
UNLESS OTHERWISE SPECIFIED
DIMENSIONS ARE IN MILLIMETERS
TOLERANCES ARE:

FRACTIONS	DECIMAL	ANGLES
± N/A	X = ± 1 .X = ± .1 .XX = ± .05	±.50°

THIRD ANGLE PROJECTION

MATERIAL
COPPER
C10100
(H02)

FINISH MACHINED SURFACES 125 UNLESS OTHERWISE NOTED
DEBURR & BREAK ALL SHARP EDGES

DO NOT SCALE DRAWING

DRAWN J HENRY
DATE 18NOV19

United States Department of Energy
Jefferson Lab
Thomas Jefferson National Accelerator Facility
Newport News Virginia

SRF
AUP RFD DAMPER
HORIZONTAL HOM DAMPER
HOM FEEDTHROUGH 25ohm PINCE

SIZE B
DWG. NO. JL0089757
REV. A
SCALE 2:1
USED ON ASSY NO. JL0089751
SHEET 1 OF 1

Approved: 6/9/2020; E-Sign ID : 417969; signed by: Ap. 1: N. Huque; C.: S. Williams; D: T. Fuell