REVISION HISTORY			
ZONE	REV	DESCRIPTION	DATE/REVISER
B-2	A	ITEM 1 AND 2 NAMES CHANGED TO MATCH NAMES ON RELEASED DRAWING.	15JUL19 GEH

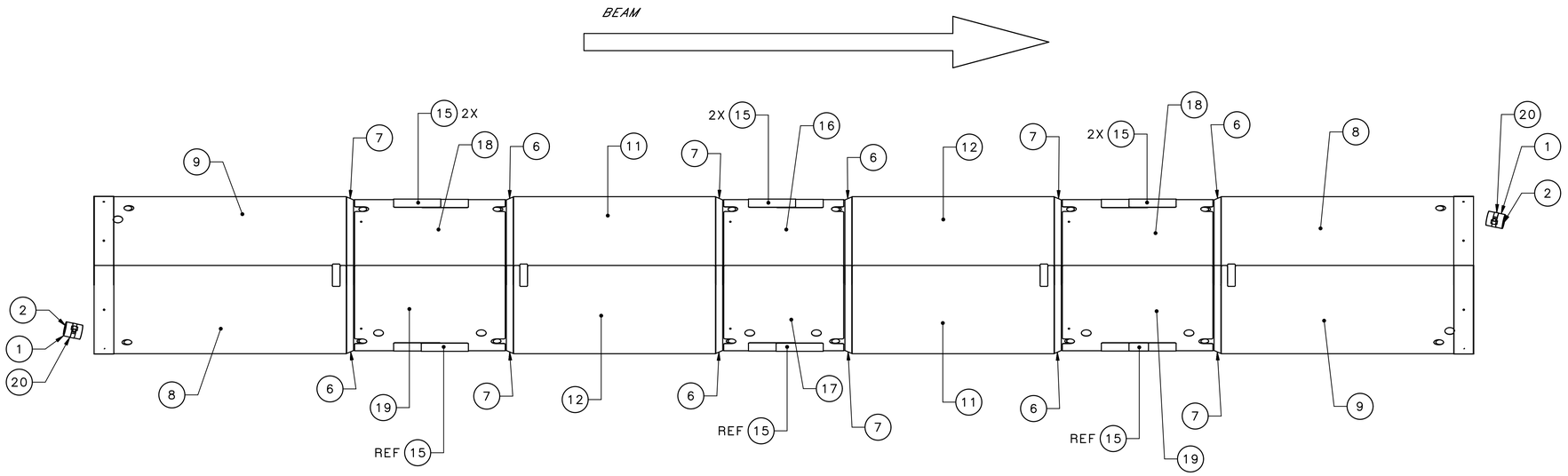

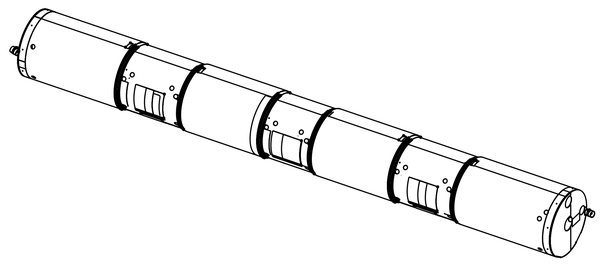

ISOMETRIC VIEW

SCALE: NONE

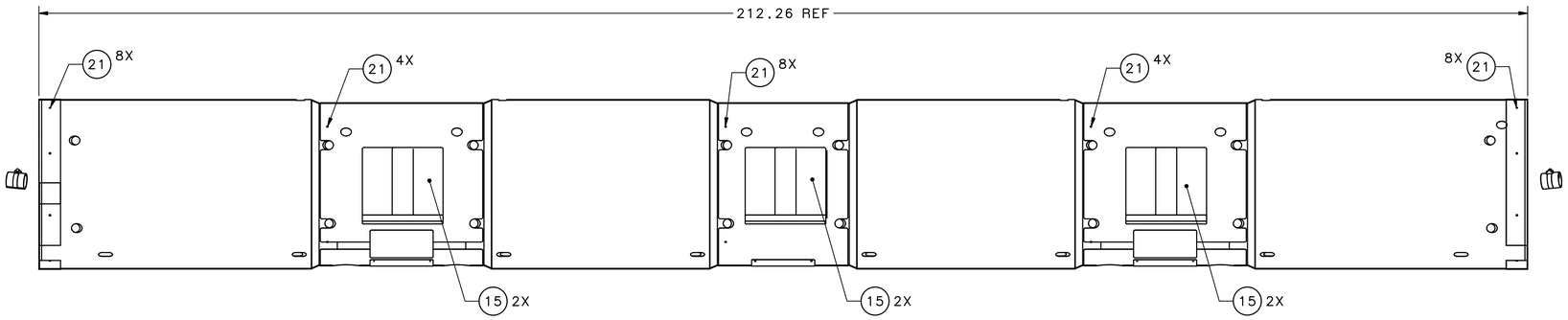

ELEVATION VIEW

NOTES:

1. FABRICATE PER STATEMENT OF WORK #10421100-M8U-8200-A001-SOW.
2. ESTIMATED WEIGHT: 160 POUNDS.
3. CLEAN AND HANDLE PER GENERAL JLAB SPECIFICATION: 11141-S-0035.
4. FINAL ASSEMBLY BY JEFFERSON LAB. AT JOINTS, RIVET WHEN PILOT HOLES EXIST. TAPE ALL JOINTS REGARDLESS OF RIVETS OR NOT.
5. ITEMS 1,2 AND 20 ARE TO BE SHIPPED LOOSE.

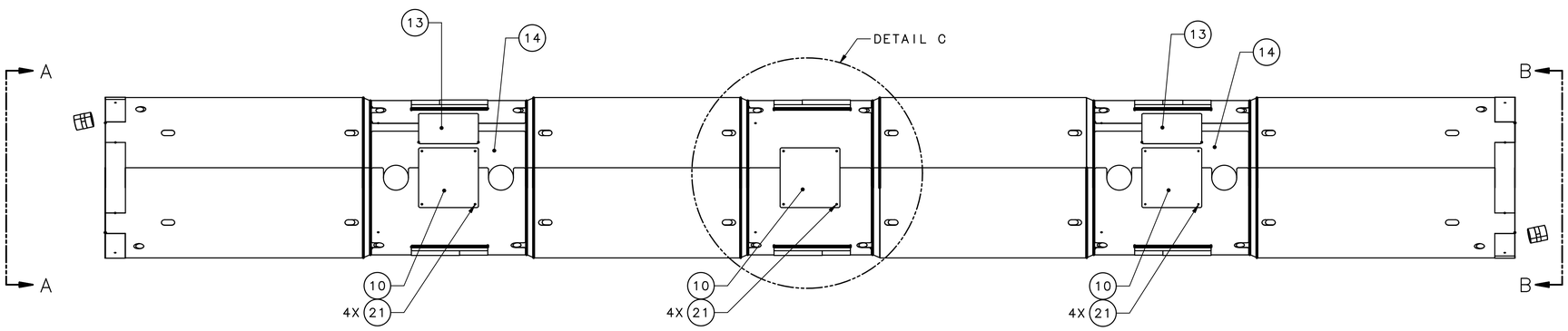

BOTTOM VIEW

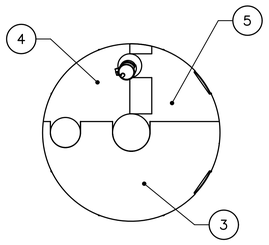

SECTION A-A

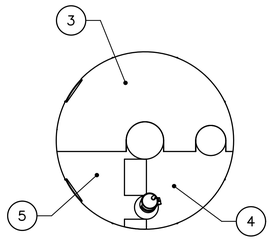

SECTION B-B

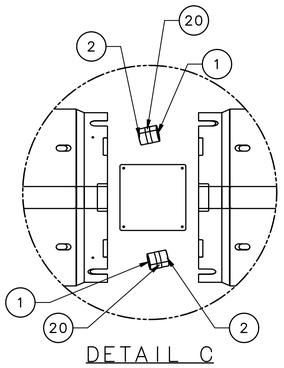

DETAIL C

SCALE 1:8

ITEMS 5,6 AND 20
HIDDEN FOR CLARITY

QTY REQD	ITEM NO.	PART OR IDENTIFYING NO.	NOMENCLATURE OR DESCRIPTION	MATERIAL SPECIFICATION	NOTES
A/R	22	3M CO. 850-3	TAPE, 3 INCH WIDE	REFLECTIVE MYLAR	-
40	21	MCMASTER-CARR# 97447A015	BLIND RIVET, .125 BODY DIA X .250 BODY LENGTH	ALUMINUM 5052	-
4	20	MCMASTER-CARR 5661K120	CLAMP-WORM DRIVE	STAINLESS STEEL 304	-
2	19	104211200-M8U-8200-A010	INNER SHIELD - PATCH 5B TOP ASSY	-	-
2	18	104211200-M8U-8200-A009	INNER SHIELD - PATCH 5A TOP ASSY	-	-
1	17	104211200-M8U-8200-A013	INNER SHIELD - PATCH 7B TOP ASSY	-	-
1	16	104211200-M8U-8200-A012	INNER SHIELD - PATCH 7A TOP ASSY	-	-
12	15	CRM9005020-1046	INNER SHIELD ACCESS DOOR	-	-
2	14	CRM9005020-1045	DOUBLE CPLR BRIDGE BOTTOM PATCH	-	-
2	13	CRM9005020-1043	DOUBLE COUPLER FILLER PATCH	-	-
2	12	CRM9005020-1034	INNER SHIELD - PATCH 9B	-	-
2	11	CRM9005020-1033	INNER SHIELD - PATCH 9A	-	-
3	10	CRM9005020-1026	INNER SHIELD - BOT COVER PANEL	-	-
2	9	CRM9005020-1022	INNER SHIELD - PATCH 6B	-	-
2	8	CRM9005020-1021	INNER SHIELD - PATCH 6A	-	-
6	7	CRM9005020-1006	INNER SHIELD - PATCH 3B	-	-
6	6	CRM9005020-1005	INNER SHIELD - PATCH 3A	-	-
2	5	104211200-M8U-8200-A006	INNER SHIELD - PATCH 1B	-	-
2	4	104211200-M8U-8200-A005	INNER SHIELD - PATCH 1B UPPER	-	-
2	3	104211200-M8U-8200-A004	INNER SHIELD - PATCH 1A	-	-
A 4	2	CRM9005020-1048	TUNER MOTOR END COVER-DETAIL	-	-
A 4	1	CRM9005020-1047	TUNER MOTOR COVER-DETAIL	-	-

PARTS LIST

EACH SHEET OF MULTI-SHEET DRAWINGS SHALL ALWAYS HAVE THE SAME REVISION LEVEL.

DIM & TOL PER ASME Y14.5 2009. UNLESS OTHERWISE SPECIFIED DIMENSIONS ARE IN INCHES. TOLERANCES ARE: FRACTIONS ± 1/8; DECIMAL .X ± .1, .XX ± .01, .XXX ± .005; ANGLES ± .50°

THIRD ANGLE PROJECTION

MATERIAL: SEE PARTS LIST

FINISH MACHINED SURFACES 125 UNLESS OTHERWISE NOTED
DEBURR & BREAK ALL SHARP EDGES

DO NOT SCALE DRAWING

DRAWN G.HAYS DATE 21FEB19

United States Department of Energy

Jefferson Lab — Thomas Jefferson National Accelerator Facility — Newport News Virginia

CRM
SPALLATION NEUTRON SOURCE - PPU
MAGNETIC SHIELD
INNER MAGNETIC SHIELD ASSY

SIZE E DWG. NO. 104211200-M8U-8200-A001 REV. A

SCALE 1:8 USED ON ASSY NO. 104210200-M8U-8200-A001 SHEET 1 OF 1

Approved: 7/16/2019; E-Sign ID : 393959; signed by: Ap. 1: M. Wiseman; C.: G. Cheng; D: T. Fuell