| REVISION HISTORY | | | | |
|---|---|---|---|---|
| ZONE | REV | DESCRIPTION | DATE | APPROVED |
| 7A | A | ADDED 4X R.518 DM 12/15/06 | 1/5/07<br>1/5/07 | E.F. DALY<br>R. MANUS |
| ALL | B | ADDED GEOMETRIC TOLERANCES. DM 07/10/07 | 8/28/07<br>8/28/07 | E.F. DALY<br>R. MANUS |
| 4A | C | .032 WAS .017 +.000 -.005. DM 01/06/21 | | |

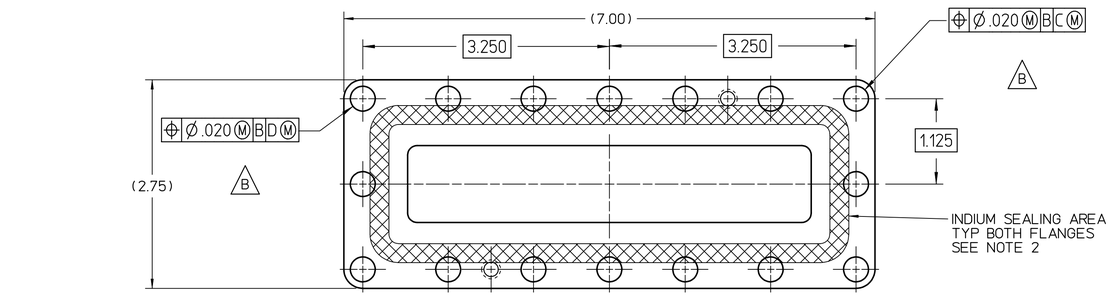


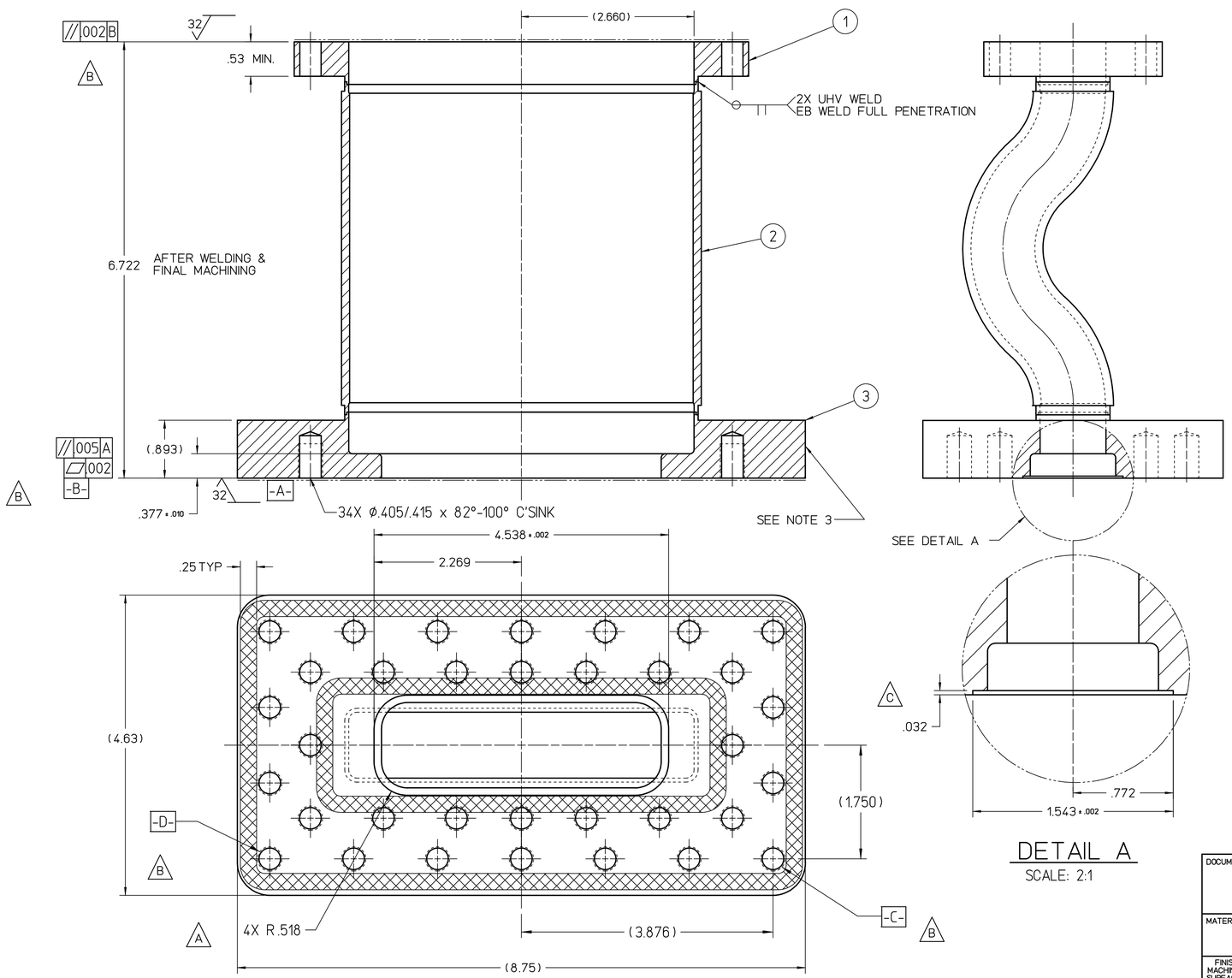


DETAIL A
SCALE: 2:1

NOTES:

1. LEAK CHECK PER SPECIFICATION 22634-S-001.
2. NO VISIBLE SCRATCHES, PITS OR FLAWS ARE ALLOWED WITHIN THE INDIUM SEALING AREA.
3. ON SIDE OF PIECE IN INDICATED REGION, MECHANICALLY OR ACID ETCH DRAWING NUMBER, INCLUDING REVISION NUMBER, IN CHARACTERS BETWEEN 0.1 AND 0.3 INCHES HIGH AND NOT LESS THAN 0.002 INCHES DEEP.

| QTY REQD | ITEM NO. | PART OR IDENTIFYING NO. | NOMENCLATURE OR DESCRIPTION | MATERIAL SPECIFICATION | NOTES |
|---|---|---|---|---|---|
| 1 | 3 | CRM-088-2025-0004 | DOGLEG WAVEGUIDE WINDOW FLANGE | | |
| 1 | 2 | CRM-088-2025-0003 | DOGLEG WAVEGUIDE SECTION | | |
| 1 | 1 | CRM-088-2025-0005 | DOGLEG WAVEGUIDE CAVITY FLANGE | | |

PARTS LIST

DOCUMENT CONTROL STAMP

MATERIAL
AS NOTED

FINISH MACHINED SURFACES 125 UNLESS OTHERWISE NOTED
DEBURR & BREAK ALL SHARP EDGES

**DO NOT SCALE DRAWING**

DIM & TOL PER ASME Y14.5
UNLESS OTHERWISE SPECIFIED
DIMENSIONS ARE IN INCHES
TOLERANCES ARE:
FRACTIONS ± DECIMAL .X ± .XX ± .01 .XXX ± .005 ANGLES ±

THIRD ANGLE PROJECTION

TRACKING NO.
N/A

| APPROVALS | DATE |
|---|---|
| DRAWN D. MACHIE | 03NOV05 |
| CHECKED E.F. DALY | 10MAY06 |
| APPROVED JE. HENRY | 10MAY06 |
| APPROVED E.F. DALY | 10MAY06 |

U.S. Department of Energy Office of Science

Jefferson Lab
Thomas Jefferson National Accelerator Facility

Operated by Jefferson Science Associates, LLC

CRM
CAVITY REWORK
WAVEGUIDE
DOGLEG WAVEGUIDE WELDMENT

SIZE D | DWG. NO. CRM-088-2025-0002 | REV. C

SCALE 1:1 | USED ON ASSY NO. CRM0882025-0001 | SHEET 1 OF 1

Me10

Approved: 01/14/2021; E-Sign ID: 430589; Signed By: Checker: S. Williams; Approver 1: F. Marhauser; DCG: T. Fuell