DESCRIPTION: KIT, 2K CLAMP ASSY
PROJECT: LCLSIICryogenicSystem
CATEGORY: KIT

REV	REVISION CONTROL DOCUMENT	DATES	SIGNATURES	
G	F10040841-G-RCD	27-Sep-2019	DRAWN	M.KRAMP
		04-Oct-2019	APPROVED	Y.ORLOV

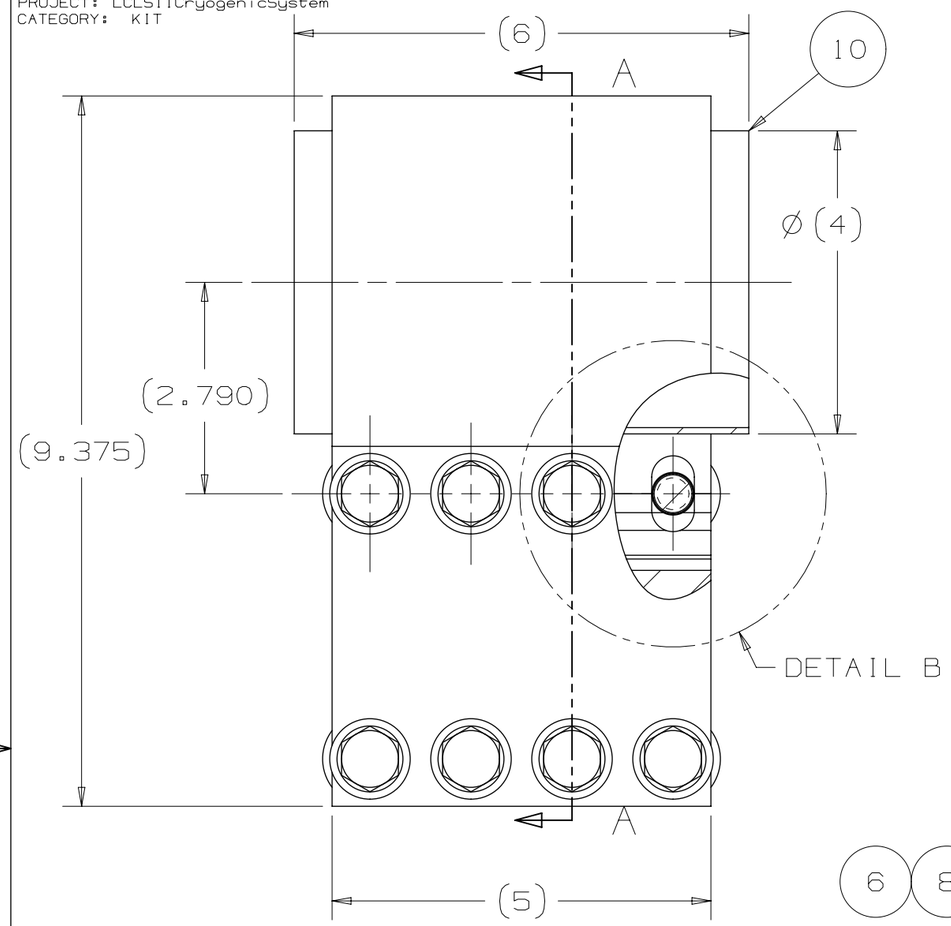

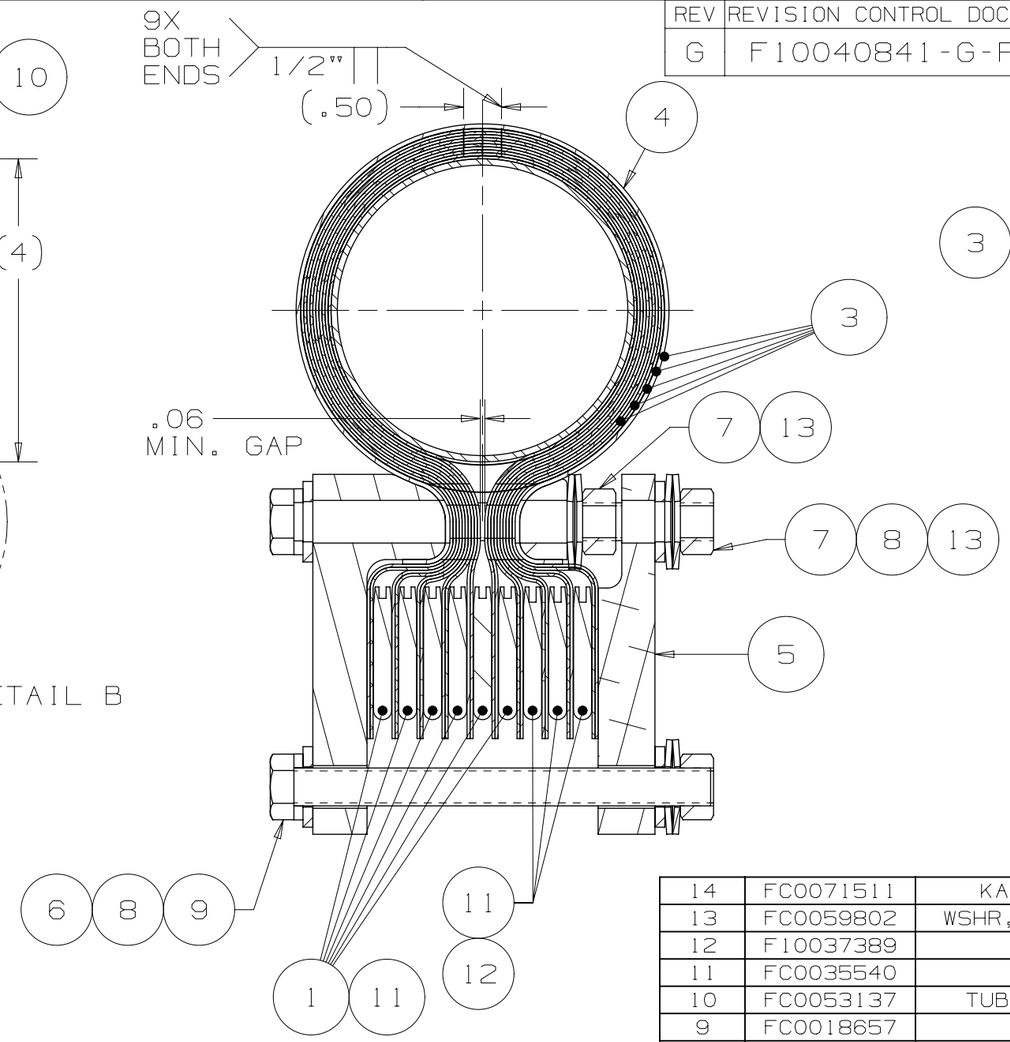

NOTE 4

SECTION A-A

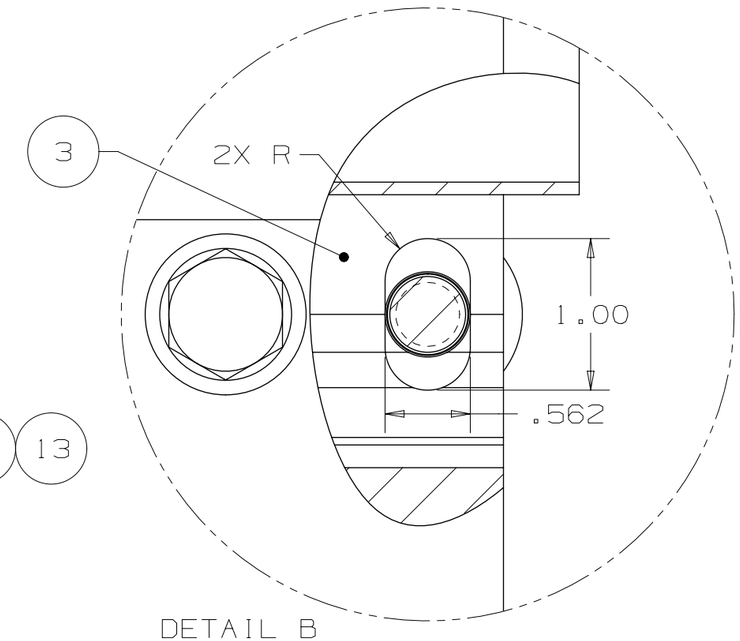

DETAIL B
SCALE 1:1
4 PLCS. NOTE 5

ITEM	PART#	DESCRIPTION	QTY.
14	FC0071511	KAPTON, .005" THICK, 12" X 12" SHEET	5
13	FC0059802	WSHR, BELLEVILLE,0.531×1.25×0.078,BERR-Cu	24
12	F10037389	PLATE, WIRE CONNECTING	3
11	FC0035540	KAPTON, .002" THICK, 6"WIDE	A/R
10	FC0053137	TUBE, 4" OD X .083" WALL X 6"LG, 304SS	1
9	FC0018657	WASHER,1/2,SPLIT LOCK,SS316	8
8	FC0015581	WASHER,1/2-0.531×1.062×0.13,SS316	16
7	FC0014529	NUT-HEX, 1/2-13×0.4375,SB	12
6	FC0009158	HHCS,1/2-13×5.5LG×FT,SS316	8
5	F10045188	PLATE, 2K STRAP CLAMPING	1
4	F10041603	WELDMENT, 2K CLAMPING STRIP	1
3	F10040853	STRIP, 2K CLAMP ASSY	10
1	F10036756	PLATE, WIRE CONNECTING	6

PARTS LIST

NOTES: (UNLESS OTHERWISE SPECIFIED)

1. KIT MUST BE FREE OF DIRT, GREASE, OIL AND CHIPS.
2. KIT TO BE FREE OF ALL SHARP EDGES, CORNERS, AND BURRS.
3. TORQUE FASTENERS TO 50 FT-LBS
4. ITEM 11 (NOT SHOWN) TO BE WRAPPED AROUND EACH INSTANCE OF ITEM 1 & 12, FOLLOWED WITH ITEM 14(NOT SHOWN) TO BE CUT INTO 4-1/2"X6" STRIPS AND WRAPPED AROUND EACH INSTANCE OF ITEM 1 & 12, PRIOR TO CLAMPING BETWEEN ITEM 3.
5. DIMENSIONS REFER TO SLOTS CUT IN ITEM 3 AFTER FORMING AROUND ITEM 10.

UNLESS OTHERWISE SPECIFIED				
±.X	±.XX	±.XXX	±X/X	±X°
.1	.02	.005	1/16	1

BREAK ALL SHARP EDGES, MAX: .015
DO NOT SCALE DRAWING
DIMENSIONS BASED ON: ASME Y14.5-2009
MAX MACHINE ALL SURFACES: 125 √
DRAWING UNITS: INCHES

THIRD ANGLE PROJECTION

DRAWN	M.KRAMP	DATE	17-Aug-2015
CHECKED	N.TANOVIC	DATE	19-Aug-2015
APPROVED	S.MAKAROV	DATE	20-Aug-2015

USED ON: F10009950

MATERIAL: SEE PARTS LIST

GROUP: Technical Division - Design and Drafting | CAGE CODE: 0U5R6

FERMI NATIONAL ACCELERATOR LABORATORY
UNITED STATES DEPARTMENT OF ENERGY

NAME: KIT, 2K CLAMP ASSY

SCALE	SIZE	DRAWING NUMBER	SHEET	REV
1:2	B	F10040841	1 OF 1	G

TEMPLATE VERSION: 2018.08.24