DWG. NO.	SHT.	REV.
75600-D-0005	1	E

REVISIONS

ZONE	REV.	DESCRIPTION	DATE	APPROVED
-	D	REDRAWN AS CAD FILE, CHANGED TITLE BLOCK FROM "B" SIZE TO "D" SIZE	S. TRUSSELL 8/11/97	DA 8/22/97 TMR 8/19/97
-	E	CHANGED ITEM 2 FROM SURA-003 TO SURA-005, CHANGED ITEM 5 FROM SURA-004 TO SURA-006, CHANGED ITEM 12 FROM MS 3120E10-GP TP 3120E10-6P, ADDED ASSEMBLY 3	M WRIGHT 1/05/01	4/30/01 4/30/01

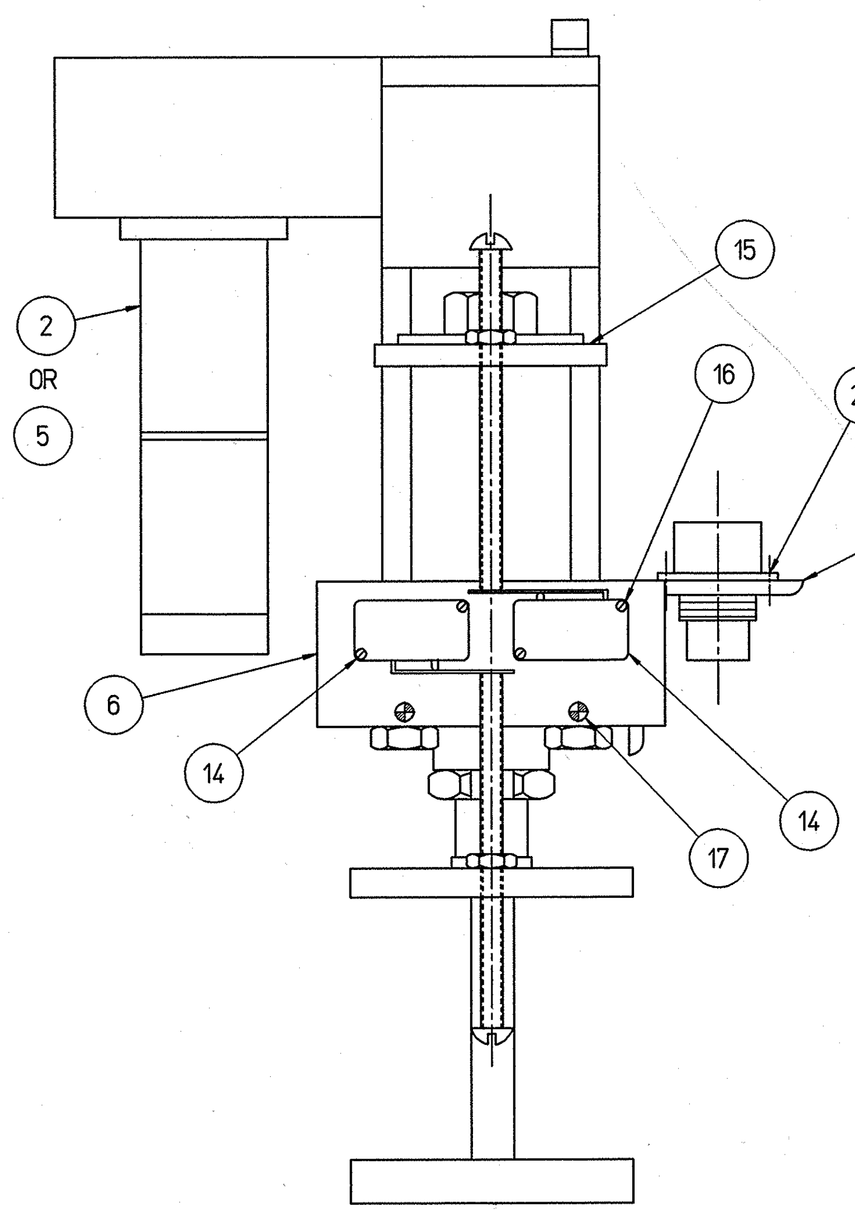

SIDE VIEW

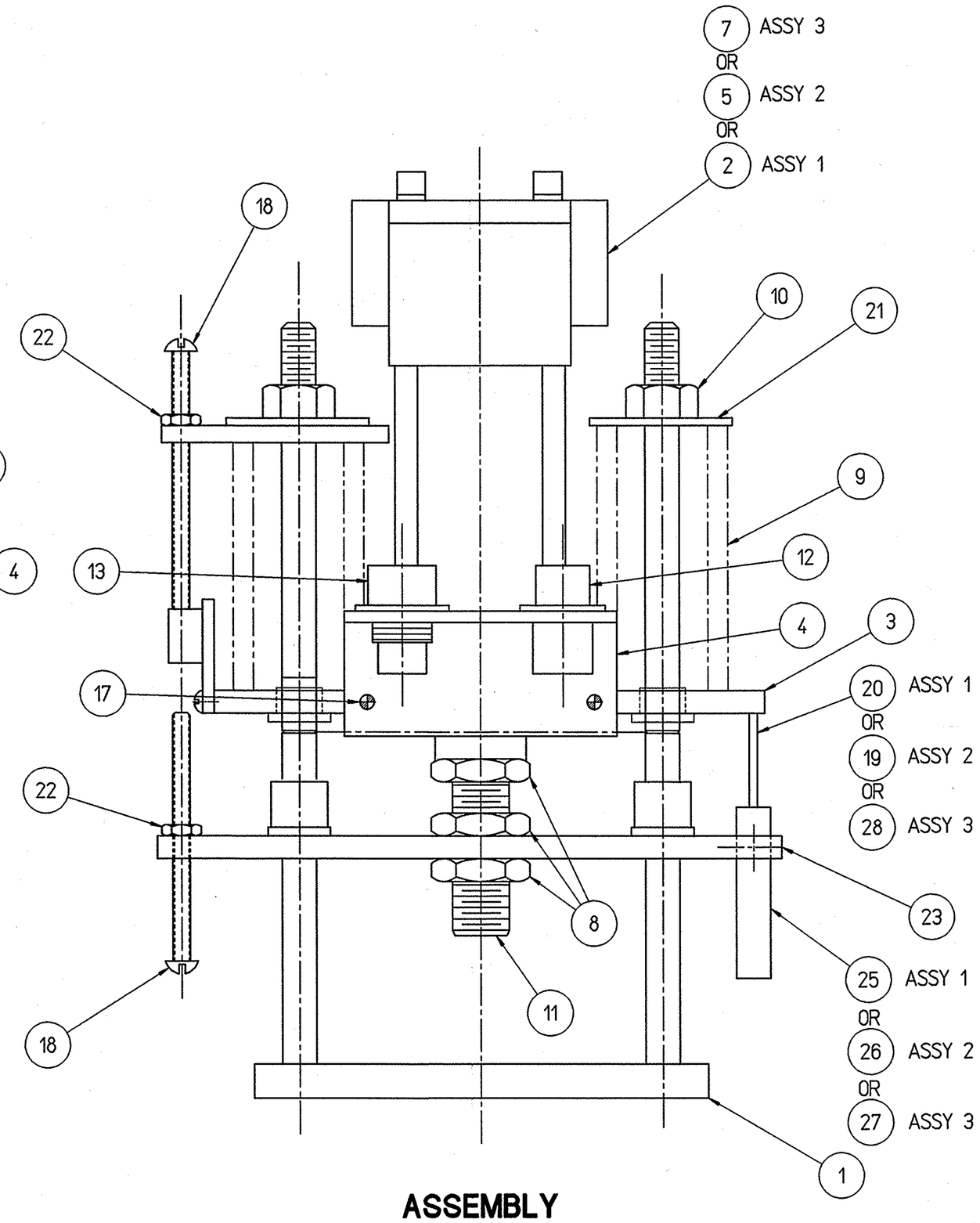

ASSEMBLY
FRONT VIEW

QTY REQD -03 ASSY.	QTY REQD -02 ASSY.	QTY REQD -01 ASSY.	ITEM NO.	PART OR IDENTIFYING NO.	NOMENCLATURE OR DESCRIPTION	MATERIAL SPECIFICATION	NOTES
1	-	-	28	75600-B-0018	LVDT PLUNGER ROD		
1	-	-	27	LUCAS	LVDT, TYPE 1000 MHR		3
-	1	-	26	LUCAS	LVDT, TYPE 500 MHR		3
-	-	1	25	LUCAS	LVDT, TYPE 250 MHR		3
8	8	8	24	-	#4-40 UNC x 1/4 LG RD.HD. MACH SCR	SST	-
1	1	1	23	-	6-32 x 1/8" SET SCREW	SST	-
2	2	2	22	-	10-32 KEPNUT CS	SST	-
2	2	2	21	-	3/8 WASHER, 1 1/2 OD x 13/32 ID	ZINC PLATED STEEL	-
-	-	1	20	75600-B-0018	LVDT PLUNGER ROD		3
-	1	-	19	75600-B-0018	LVDT PLUNGER ROD		3
2	2	2	18	-	#10-32 UNF 3" LG. RD.HD. MACH SCR	SST	-
4	4	4	17	-	#6-32 UNC 1/4 LG RD.HD. MACH SCR	SST	-
4	4	4	16	-	#4-40 UNC 5/8 LG RD.HD. MACH SCR	SST	-
1	1	1	15	75600-B-0019	STOP SCREW MTG. PLATE		-
2	2	2	14	E23-50H	MICROSWITCH-CHERRY		-
1	1	1	13	GOB-12-88 PNE	CONNECTOR-BURNDY		-
1	1	1	12	MS 3120E10-6P	CONNECTOR-AMPHENOL		-
1	1	1	11	75600-B-0011	TH'D EXTENSION		-
2	2	2	10	-	3/8 HEX NUT; LOCK TYPE w/ NYLON INSERT		-
2	2	2	9	McMASTER-CARR #9620K53	SPRING, 13/16 I.D., 3" LG., Ø1/4 WIRE	CARBON STEEL	-
3	3	3	8	75600-B-0010	5/8 LOCK NUT		-
1	-	-	7	INDUSTRIAL DEVICES	ELECTRIC CYLINDER VALVE ACTUATOR MOTOR & GEAR BOX	SURA-007	-
1	1	1	6	75600-B-0007	MICROSWITCH MTG. PLATE		-
-	1	-	5	INDUSTRIAL DEVICES	ELECTRIC CYLINDER VALVE ACTUATOR MOTOR & GEAR BOX	SURA-006	3
1	1	1	4	75600-C-0017	CONNECTOR SUPPORT		-
1	1	1	3	75600-C-0013	TOP PLATE		-
-	-	1	2	INDUSTRIAL DEVICES	ELECTRIC CYLINDER; VALVE ACTUATOR MOTOR & GEAR BOX	SURA-005	3
1	1	1	1	75600-C-0016	ACTUATOR SUPPORT ASSY.		-

PARTS LIST

NOTES:

1:) ITEMS (12) & (13) NOT SHOWN

2:) CHECK ITEM (20) FOR FIT, SHIP LOOSE

3:) ASSEMBLY 001 FOR .563 STROKE
ASSEMBLY 002 FOR .812 STROKE
ASSEMBLY 003 FOR 1.50 STROKE

4:) MADE FROM FERMI DRAWING 1650.MD-107531

DIM & TOL PER ANSI Y14.5
UNLESS OTHERWISE SPECIFIED
DIMENSIONS ARE IN INCHES
TOLERANCES ARE:
FRACTIONS ± 1/32 DECIMAL .XX ± N/A .XXX ± N/A ANGLES ± N/A

MATERIAL: SEE PARTS LIST

FINISH N/A UNLESS OTHERWISE NOTED

DEBURR & BREAK ALL SHARP EDGES

DO NOT SCALE DRAWING

CADD I.D. NO. /wbs/7/wbs_7_5/75600/D0005

APPROVALS	DATE
DRAWN FERMI	7/23/90
CHECKED T. REID	7/23/90
APPROVED D. KASHY	7/23/90
APPROVED D. KASHY	7/23/90

Jefferson Lab
Thomas Jefferson National Accelerator Facility
NEWPORT NEWS, VIRGINIA
UNITED STATES DEPARTMENT OF ENERGY

ACCELERATOR CRYOGENICS
STANDARD PARTS
ELECTRIC VALVE ACTUATOR
ASSEMBLY

SIZE D | DWG. NO. 75600-D-0005 | REV. E

SCALE FULL | USED ON ASSY NO. - | SHEET 1 OF 1