REVISION HISTORY				
ZONE	REV	DESCRIPTION	DATE	APPROVED
1-3A	A	1. REPLACED ITEM#1 BLANK FLANGE QF40-150-SB WITH WELD SOCKET FLANGE QF40-150-SST.		

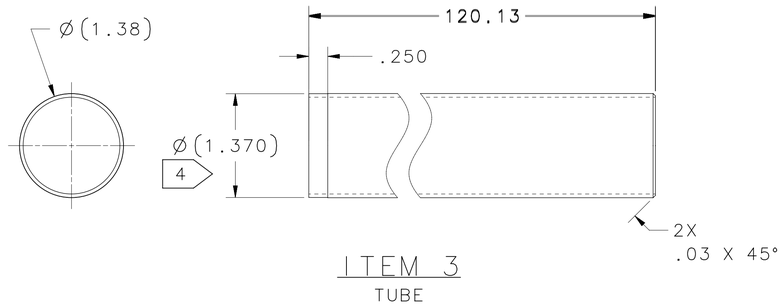

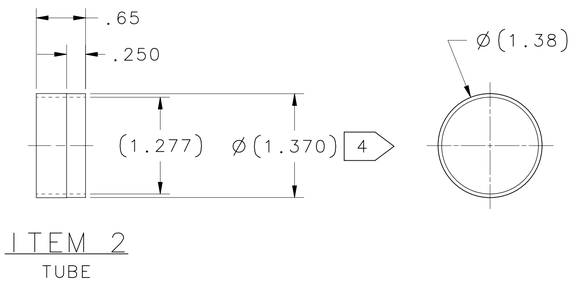

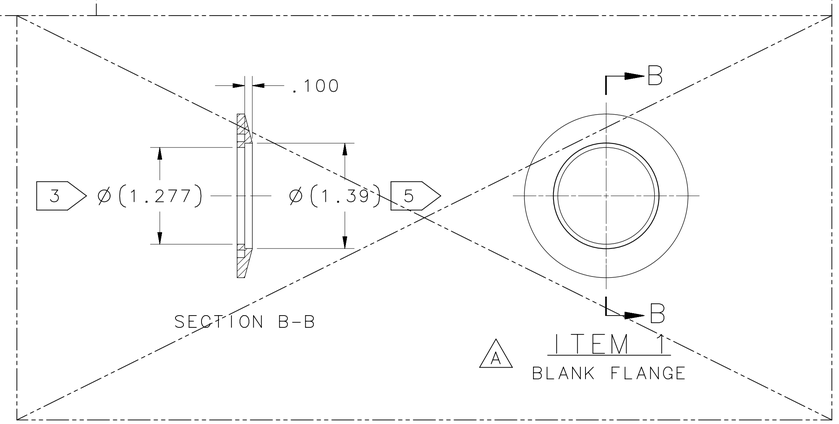

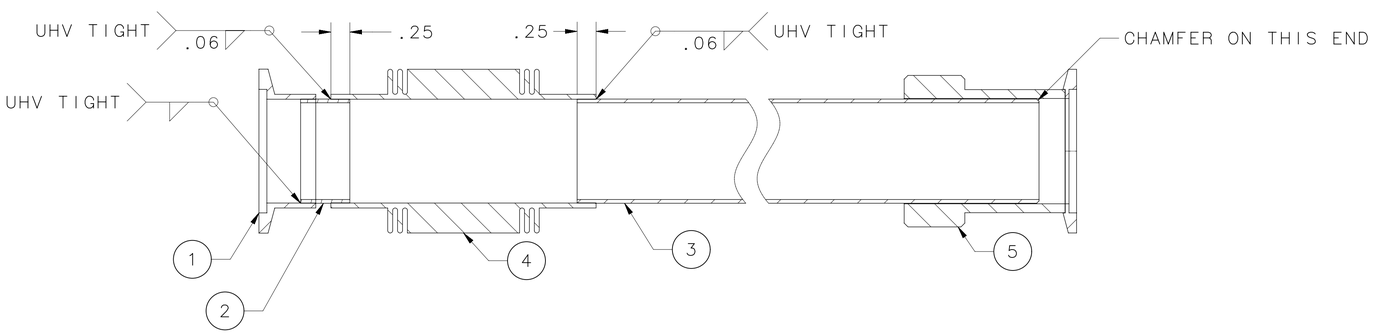

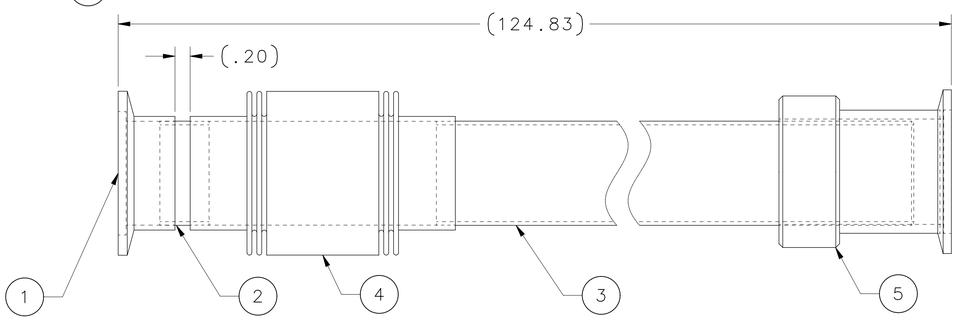

VIEW A

NOTES:

1. USE THE FOLLOWING CEBAF SPECIFICATIONS:
   FABRICATION OF UHV EQUIPMENT: #22631-S-001
   CLEANING & HANDLING OF UHV COMPONENTS: #22632-S-001
   WELDING OF UHV COMPONENTS: #22633-S-001
   HELIUM LEAK TEST FOR UHV COMPONENTS: #22634-S-001

2. PROTECT FLANGE FACE DURING AND AFTER PROCESSING WITH SUITABLE PLASTIC CAP, DAMAGE TO FLANGE FACE IS UNACCEPTABLE.

3. MATCH ID OF BEAM TUBE ITEM 2.

4. VERIFY ID OF BELLOWS CUFF ITEM 4 AND OD OF TUBE, TURN DOWN END OF TUBE TO FIT BELLOWS CUFF AS NEEDED. MIN WALL THICKNESS OF TUBE 0.045 INCH.

5. MATCH OD OF BEAM TUBE ITEM 2.

QTY REQD	ITEM NO.	PART OR IDENTIFYING NO.	NOMENCLATURE OR DESCRIPTION	MATERIAL SPECIFICATION	NOTES
1	5	MDC 734032	QUICK DISCONNECT, NW40 X 1.375 TUBE	-	-
1	4	MDC #470505	BELLOWS 1.50 NOM 3.50 L FORMED WELDED CUFF	STAINLESS STEEL TYPE 316	-
1	3	B11106-08-02-0112-3	TUBE 1-3/8 OD X 0.049 WALL THK	STAINLESS STEEL TYPE 304	-
1	2	B11106-08-02-0112-2	TUBE 1-3/8 OD X 0.049 WALL THK	STAINLESS STEEL TYPE 304	-
A 1	1	KURT LESKER QF40-150-SST	KF40 1.50 OD X 1.37 ID .75 LG NECK	STAINLESS STEEL TYPE 304	-

PARTS LIST

FOR JLAB INTERNAL USE ONLY

ALL WELDS ON THIS DRAWING ARE AS DEFINED BY JLAB ES & H MANUAL, WELDING & BRAZING PROGRAM SUPPLEMENT.

WELD CLASS: B

WELD SPECIFICATION: 22633-S-001

WELD ANALYSIS

DIM & TOL PER ASME Y14.5. UNLESS OTHERWISE SPECIFIED DIMENSIONS ARE IN INCHES. TOLERANCES ARE:
FRACTIONS ± N/A; DECIMAL .X ±.1, .XX ±.01, .XXX ±.005; ANGLES ±.50°

THIRD ANGLE PROJECTION

MATERIAL: SEE PARTS LIST

FINISH MACHINE SURFACES 125 UNLESS OTHERWISE NOTED
DEBURR & BREAK ALL SHARP EDGES

DO NOT SCALE DRAWING

DRAWN: S.A. GREGORY
DATE: 14DEC15

United States Department of Energy
Jefferson Lab
Thomas Jefferson National Accelerator Facility
Newport News Virginia

B11106 PROTON-RADIUS EXP, HALL B
08 VACUUM
02 VESSELS
PRAD BEAM TUBE & BELLOWS ASSY

SIZE D | DWG. NO. B11106-08-02-0112 | REV. A
SCALE 1:1 | USED ON ASSY NO. B11106-08-02-0000 | SHEET 1 OF 1

Approved: 04/01/2016; E-Sign ID: 321438; Signed By: Approver 1: E. Pasyuk; Checker: B. Miller; DCG: T. Fuell